ZOLOTO®
VALVES
since 1966

AN ISO 9001, 14001 & 45001
CERTIFIED COMPANY

1008 Bronze Ball Valve (Screwed)

Salient Features

- Screwed Female Ends to IS 554 / BS 21 / ISO 7.
- Full Bore, Two Piece Design.
- Quarter Turn, Lever Operated.
- Provided with Stainless Steel Ball.
- Premium Quality PTFE Gland Packing and Seating.

Test Pressure (Hydrostatic) :
Shell : 25 kg/cm²g (350 psig)
Seat : 16 kg/cm²g (225 psig)
Maximum Working Temperature : 220°C

Suitable For
Water, Oil

Materials

P.No.	Name of Part	Material of Construction	Specification	Quantity
1	Body	Bronze	IS 318 GR. LTB 2	1
2	Bonnet	Bronze / Forged Brass	IS 318 GR. LTB 2 / IS 6912 Gr. FLB	1
3	Ball	Stainless Steel	ASTM A276 Type 304 / ASTM A351 Gr. CF8	1
4	Body Seat Ring	PTFE	– – –	2
5	Thrust Washer	PTFE	– – –	1
6	Gland Packing	PTFE	– – –	–
7	Stem	Stainless Steel	ASTM A276 Type 410	1
8	Gland	Forged Brass	IS 6912 Gr. FLB	1
9	Lever	Mild Steel	– – –	1
10	Nut	Carbon Steel	– – –	1

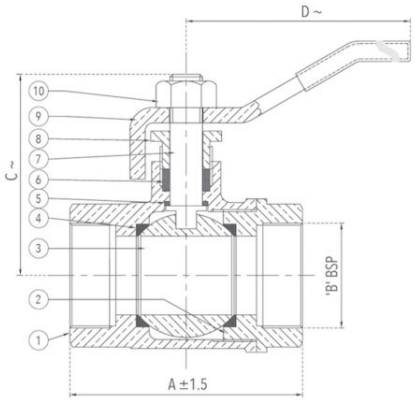

Sizes / Dimensions

Size (Inches)	Size (mm)	A ±1.5	B	C ~	D ~
1/2*	15*	60	1/2″	44	105
3/4*	20*	66	3/4″	48	123
1*	25*	73	1″	58	123
1 1/4	32	91	1 1/4″	73	148
1 1/2	40	91	1 1/2″	80	178
2	50	117	2″	85	213
2 1/2	65	135	2 1/2″	110	245
3	80	162	3″	116	330
4	100	201	4″	139	330

~ ±10

*Bonnet for Size 15, 20 and 25 is of Forged Brass.

ZOLOTO INDUSTRIES
Zoloto House, 11th Milestone, Lambra, Nakodar Road,
Jalandhar – 144026. Punjab. INDIA
https://www.zolotovalves.com
Phones : +91 181 4676666 (100 Lines)
Facsimile: +91 181 2792500 & 2251600
Email : sales@zolotovalves.com, mktg@zolotovalves.com

ZOLOTO®
VALVES
since 1966

AN ISO 9001, 14001 & 45001
CERTIFIED COMPANY

1008A Bronze Ball Valve E-Model (Screwed)

Salient Features

- Screwed Female Ends to IS 554 / BS 21 / ISO 7.
- Full Bore, Two Piece Design.
- Quarter Turn, Lever Operated.
- Provided with Stainless Steel Ball.
- Premium Quality PTFE Gland Packing and Seating.

Test Pressure (Hydrostatic) :
Shell : 20 kg/cm²g (285 psig)
Seat : 13.5 kg/cm²g (192 psig)
Maximum Working Temperature : 220°C

Suitable For
Water, Oil

Materials

P.No.	Name of Part	Material of Construction	Specification	Quantity
1	Body	Bronze	IS 318 Gr. LTB 2	1
2	Bonnet	Bronze	IS 318 Gr. LTB 2	1
3	Ball	Stainless Steel	ASTM A276 Type 304 / ASTM A351 Gr. CF8	1
4	Body Seat Ring	PTFE	– – –	2
5	Thrust Washer	PTFE	– – –	1
6	Gland Packing	PTFE	– – –	–
7	Stem	Stainless Steel	ASTM A276 Type 410	1
8	Gland	Forged Brass	IS 6912 Gr. FLB	1
9	Lever	Mild Steel	– – –	1
10	Nut	Carbon Steel	– – –	1

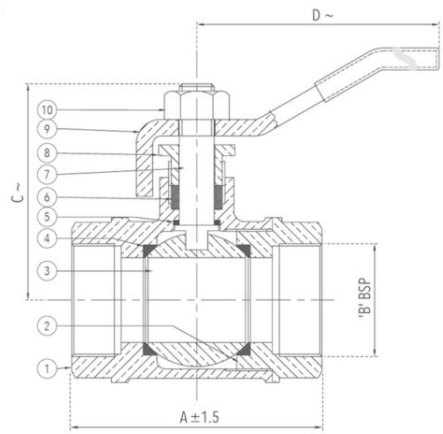

Sizes / Dimensions

Size (Inches)	Size (mm)	A ±1.5	B	C ~	D ~
1/2	15	53	1/2″	40	106
3/4	20	58	3/4″	44	123
1	25	68	1″	50	123
1 1/4	32	76	1 1/4″	65	147
1 1/2	40	85	1 1/2″	72	178
2	50	102	2″	79	217

~ ±10

ZOLOTO INDUSTRIES
Zoloto House, 11th Milestone, Lambra, Nakodar Road,
Jalandhar – 144026. Punjab. INDIA
https://www.zolotovalves.com
Phones : +91 181 4676666 (100 Lines)
Facsimile: +91 181 2792500 & 2251600
Email : sales@zolotovalves.com, mktg@zolotovalves.com

ZOLOTO®
VALVES
since 1966

AN ISO 9001, 14001 & 45001
CERTIFIED COMPANY

1008B Forged Brass Ball Valve (Screwed)

Salient Features

- Screwed Female Ends to IS 554 / BS 21 / ISO 7.
- Full Bore, Two Piece Design.
- Quarter Turn, Lever Operated.
- Provided with Forged Brass Hard Chrome Plated Ball.
- Premium Quality PTFE Gland Packing and Seating.
- Chrome Finish.

Test Pressure (Hydrostatic) :
Shell : 25 kg/cm²g (350 psig)
Seat : 16 kg/cm²g (225 psig)
Maximum Working Temperature : 220°C

Suitable For
Water, Oil, Air*
*Suitable for pressure upto 6.9 Kg/cm²g

Materials

P.No.	Name of Part	Material of Construction	Specification	Quantity
1	Body	Forged Brass	IS 6912 Gr. FLB	1
2	Bonnet	Forged Brass	IS 6912 Gr. FLB	1
3	Ball	Forged Brass (Hard Chrome Plated)	IS 6912 Gr. FLB	1
4	Body Seat Ring	PTFE	– – –	2
5	Thrust Washer	PTFE	– – –	1
6	Gland Packing	PTFE	– – –	
7	Stem	Forged Brass	IS 6912 Gr. FLB	1
8	Gland	Forged Brass	– – –	1
9	Lever	Aluminium Alloy / Mild Steel	– – –	1
10	Nut	Brass (Chrome Plated)	– – –	1

Note : Lever for Size 8mm and 10mm is of Mild Steel

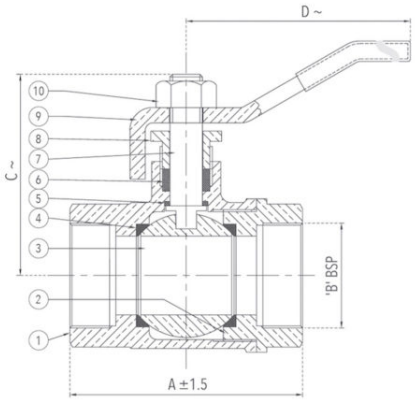

Sizes / Dimensions

Size (Inches)	Size (mm)	A ±1.5	B	C ~	D ~
1/4	8	47	1/4″	37	90
3/8	10	47	3/8″	37	90
1/2	15	50	1/2″	40	106
3/4	20	57	3/4″	43	132
1	25	67	1″	47	132
1 1/4	32	76	1 1/4″	62	166
1 1/2	40	87	1 1/2″	68	176
2	50	104	2″	80	216
2 1/2	65	139	2 1/2″	100	216
3	80	155	3″	110	280
4	100	177	4″	124	280

~ ±10

ZOLOTO INDUSTRIES
Zoloto House, 11th Milestone, Lambra, Nakodar Road,
Jalandhar – 144026. Punjab. INDIA
https://www.zolotovalves.com
Phones : +91 181 4676666 (100 Lines)
Facsimile: +91 181 2792500 & 2251600
Email : sales@zolotovalves.com, mktg@zolotovalves.com

ZOLOTO®
VALVES
since 1966

AN ISO 9001, 14001 & 45001 CERTIFIED COMPANY

1078 Butterfly Valve (Wafer Type) PN 1.6 with S.G Iron Disc

IS 13095 CM/L-9700112213

Salient Features

- Design Standard IS 13095 / BS EN 593 (BS 5155).
- Wafer Type.
- Lever Operated.
- S.G Iron construction.
- S.G Iron disc which is accurately guided between the two stems.
- Integrally moulded rubber lining (EPDM / Nitrile / Neoprene* / Viton* / Silicon*) as per requirement which provides seating to the valve disc, as a primary seal to the stem and gasket joint with matching pipe flanges.
- Two Piece Stem design which is precisely guided between the PTFE / Bronze bushes.
- Compatible to sandwich between flanges as per BS 10 Table D, E, F,H, DIN, PN 10, PN 16, PN 25, PN 40, ASA 150, ASA 300, IS 778, IS 6392 Table 17 and IS 1538.

*Valves with Neoprene / Viton / Silicon lining can also be provided at nominal extra cost.

PN 1.6 –
Test Pressure (Hydrostatic) :
Shell : 2.4 MPa
Seat : 1.76 MPa
Maximum Working Temperature : 90°C
Maximum Working Pressure : 1.6 MPa

Suitable For
Water

Materials

P.No.	Name of Part	Material of Construction	Specification	Qty.
1	Flow Control Lever	Carbon Steel (Powder Coated)	– – –	1
2	Notch Plate	Carbon Steel (Powder Coated)	– – –	1
3	Packing Bush	PTFE	– – –	1
4	Upper Stem	Stainless Steel	IS 6603 Gr. 12 Cr12	1
5	Body	S.G Iron	IS 1865 Gr. 400/15	1
6	Disc	S.G Iron (Epoxy Coated)	IS 1865 Gr. 400/15	1
7	Name Plate	Aluminium	– – –	1
8	Bush	PTFE / Bronze	– – – / IS 318 Gr. LTB 2	1
9	Lower Stem	Stainless Steel	IS 6603 Gr. 12 Cr12	1
10	‘O’ Ring	Nitrile Rubber	IS 5192 – 1	1
11	L – Key Screw	Carbon Steel	– – –	1
12	C – Sunk Screw & Nuts	Carbon Steel	– – –	2 Each
13	Locking Washer	Spring Steel	– – –	2
14	Body Lining	EPDM / Nitrile	IS 5192 – 1	1

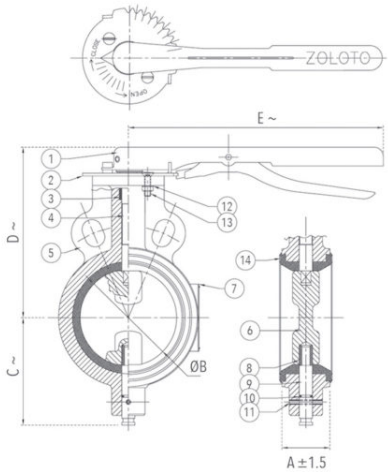

Sizes / Dimensions

Size (Inches)	Size (mm)	A ±1.5	ØB	C ~	D ~	E ~
1 1/2	40	33	40.6	57	113	260
2	50	43	52.4	73	125	260
2 1/2	65	46	67	80	140	260
3	80	46	81.3	88	145	260
4	100	52	101	110	178	260
5	125	56	127.1	122	190	260
6*	150*	56	151	151	204	260

~ ±10
*Bush for Size 150 is of Bronze.

ZOLOTO INDUSTRIES
Zoloto House, 11th Milestone, Lambra, Nakodar Road,
Jalandhar – 144026. Punjab. INDIA
https://www.zolotovalves.com
Phones : +91 181 4676666 (100 Lines)
Facsimile: +91 181 2792500 & 2251600
Email : sales@zolotovalves.com, mktg@zolotovalves.com

NOTE : Valves are also available with limit switch (Non-ISI), Pad lock arrangement and gear arrangement at nominal extra cost.

ZOLOTO INDUSTRIES
Zoloto House, 11th Milestone, Lambra, Nakodar Road,
Jalandhar – 144026. Punjab. INDIA
https://www.zolotovalves.com
Phones : +91 181 4676666 (100 Lines)
Facsimile: +91 181 2792500 & 2251600
Email : sales@zolotovalves.com, mktg@zolotovalves.com

ZOLOTO®
VALVES
since 1966

AN ISO 9001, 14001 & 45001 CERTIFIED COMPANY

1078A Butterfly Valve (Wafer Type) PN 1.6 with S.G Iron Disc - Gear Operated

IS 13095 CM/L-9700112213

Salient Features

- Design Standard IS 13095 / BS EN 593 (BS 5155).
- Wafer Type.
- Gear Operated.
- S.G Iron construction.
- S.G Iron disc which is accurately guided between the two stems.
- Integrally moulded rubber lining (EPDM / Nitrile / Neoprene* / Viton* / Silicon*) as per requirement which provides seating to the valve disc, as a primary seal to the stem and gasket joint with matching pipe flanges.
- Two Piece Stem design which is precisely guided between the PTFE / Bronze bushes.
- Compatible to sandwich between flanges as per BS 10 Table D, E, F,H, DIN, PN 10, PN 16, PN 25, PN 40, ASA 150, ASA 300, IS 778, IS 6392 Table 17 and IS 1538.

*Valves with Neoprene / Viton / Silicon lining can also be provided at nominal extra cost.

PN 1.0 –
Test Pressure (Hydrostatic) :
Shell : 1.5 MPa
Seat : 1.1 MPa
Maximum Working Pressure : 1.0 MPa
Maximum Working Temperature : 90°C
PN1.6 –
Test Pressure (Hydrostatic) :
Shell : 2.4 MPa
Seat : 1.76 MPa
Maximum Working Pressure : 1.6 MPa
Maximum Working Temperature : 90°C

Suitable For
Water

Materials

P.No.	Name of Part	Material of Construction	Specification	Qty.
1	Gear Box Assembly	– – –	– – –	1
2	Gasket	Steam Jointing Sheet	IS2712 Gr. W/3	1
3	Packing Bush	Bronze	IS 318 Gr. LTB 2	1
4	Upper Stem	Stainless Steel	IS 6603 Gr. 12 Cr12	1
5	Body	S.G Iron	IS 1865 Gr. 400/15	1
6	Disc	S. G Iron (Epoxy Coated)	IS 1865 Gr. 400/15	1
7	Taper Pin (Optional)	Stainless Steel	IS 6603 Gr. X04Cr19Ni9	To Suit
8	Bush	Bronze	IS 318 Gr. LTB 2	1
9	Lower Stem	Stainless Steel	IS 6603 Gr. 12 Cr12	1
10	‘O’ Ring	Nitrile Rubber	IS 5192 – 1	1
11	L- Key Screw	Carbon Steel	– – –	To Suit
12	C – Sunk Screw & Nuts	Carbon Steel	– – –	4 Each
13	Handwheel	Sheet Metal	– – –	1
14	Body Lining	EPDM / Nitrile	IS 5192 – 1	1
15	Name Plate	Aluminium	– – –	1

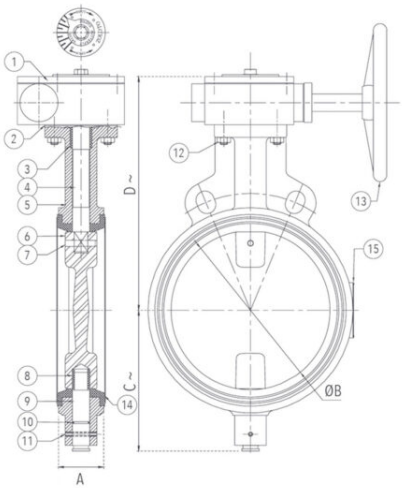

Sizes / Dimensions

Size (Inches)	Size (mm)	A	ØB	C ~	D ~
8	200	60 ±2	201.6	180	295
10	250	68 ±2	252.2	220	320
12	300	78 ±2	301.3	247	344
14	350	85 ±3	352	292	400
16	400	96 ±3	393.8	314	428

ZOLOTO INDUSTRIES
Zoloto House, 11th Milestone, Lambra, Nakodar Road,
Jalandhar – 144026. Punjab. INDIA
https://www.zolotovalves.com
Phones : +91 181 4676666 (100 Lines)
Facsimile: +91 181 2792500 & 2251600
Email : sales@zolotovalves.com, mktg@zolotovalves.com

Size (Inches)	Size (mm)	A	ØB	C ~	D ~
18	450	108 ±3	442	345	474
20	500	127 ±4	504.2	422	568
24	600	146.5 ±4	593	465	625

~ ±10

Sizes above 300mm are Non-ISI & Sizes above 400mm are available in PN 1.0 rating only.
Note : Valves are also available with limit switch (Non-ISI) and Pad lock arrangement at nominal extra cost.
Taper Pin (Part No.7) is not applicable for size 200mm.

ZOLOTO®
VALVES
since 1966

AN ISO 9001, 14001 & 45001
CERTIFIED COMPANY

1078B Butterfly Valve (Wafer Type), PN 1.6 with S.S 304 Disc

IS 13095
CM/L-9700112213

Salient Features

- Design Standard IS 13095 / BS EN 593 (BS 5155).
- Wafer Type.
- Lever Operated.
- S.G Iron construction.
- Stainless Steel (CF8 / CF8M*) Disc which is accurately guided between the two stems.
- Integrally moulded rubber lining (EPDM / Nitrile / Neoprene* / Viton* / Silicon*) as per requirement which provides seating to the valve disc, as a primary seal to the stem and gasket joint with matching pipe flanges.
- Two Piece Stem design which is precisely guided between the PTFE / Bronze bushes.
- Compatible to sandwich between flanges as per BS 10 Table D, E, F,H, DIN, PN 10, PN 16, PN 25, PN 40, ASA 150, ASA 300, IS 778, IS 6392 Table 17 and IS 1538.

*Valves with Neoprene / Viton / Silicon lining and CF8M (S.S 316) Disc can also be provided at nominal extra cost.

PN 1.6 –
Test Pressure (Hydrostatic) :
Shell : 2.4 MPa
Seat : 1.76 MPa
Maximum Working Pressure : 1.6 MPa
Maximum Working Temperature : 90°C

Suitable For
Water

Materials

P.No.	Part Name	Material	Specification	Qty.
1	Flow Control Lever	Carbon Steel (Powder Coated)	– – –	1
2	Notch Plate	Carbon Steel (Powder Coated)	– – –	1
3	Packing Bush	PTFE	– – –	1
4	Upper Stem	Stainless Steel	IS 6603 Gr. 12 Cr12	1
5	Body	S.G. Iron	IS 1865 Gr. 400/15	1
6	Disc	Stainless Steel	IS 3444 Gr. 1 / ASTM A 351 Gr. CF8	1
7	Name Plate	Aluminium	– – –	1
8	Bush	PTFE/Bronze	– – – / IS 318 Gr. LTB 2	1
9	Lower Stem	Stainless Steel	IS 6603 Gr. 12 Cr12	1
10	‘O’ Ring	Nitrile Rubber	IS 5192 – 1	1
11	L – Key Screw	Carbon Steel	– – –	1
12	C – Sunk Screw & Nuts	Carbon Steel	– – –	2 Each
13	Locking Washer	Spring Steel	– – –	2
14	Boby Lining	EPDM/Nitrile	IS 5192 – 1	1

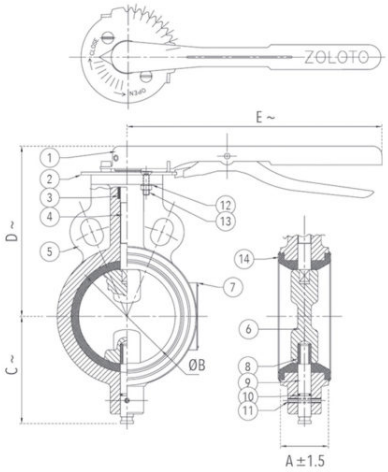

Sizes / Dimensions

Size (Inches)	Size (mm)	A ±1.5	ØB	C~	D~	E~
1 1/2	40	33	40.6	57	113	260
2	50	43	52.4	73	125	260
2 1/2	65	46	67	80	140	260
3	80	46	81.3	88	145	260
4	100	52	101	110	178	260
5	125	56	127.1	122	190	260
6*	150*	56	151	151	204	260

ZOLOTO INDUSTRIES
Zoloto House, 11th Milestone, Lambra, Nakodar Road,
Jalandhar – 144026. Punjab. INDIA
https://www.zolotovalves.com
Phones : +91 181 4676666 (100 Lines)
Facsimile: +91 181 2792500 & 2251600
Email : sales@zolotovalves.com, mktg@zolotovalves.com

~ ±10

*Bush for Size 150 is of Bronze.

NOTE : Valves are also available with limit switch (Non-ISI), Pad lock arrangement and gear arrangement at nominal extra cost.

ZOLOTO®
VALVES
since 1966

AN ISO 9001, 14001 & 45001 CERTIFIED COMPANY

1078C Butterfly Valve (Wafer Type), PN 1.6 with S.S 304 Disc - Gear Operated

IS 13095 CM/L-9700112213

Salient Features

- Design Standard IS 13095 / BS EN 593 (BS 5155).
- Wafer Type.
- Gear Operated.
- S.G Iron construction.
- Stainless Steel (CF8 / CF8M*) Disc which is accurately guided between the two stems.
- Integrally moulded rubber lining (EPDM / Nitrile / Neoprene* / Viton* / Silicon*) as per requirement which provides seating to the valve disc, as a primary seal to the stem and gasket joint with matching pipe flanges.
- Two Piece Stem design which is precisely guided between the PTFE / Bronze bushes.
- Compatible to sandwich between flanges as per BS 10 Table D, E, F,H, DIN, PN 10, PN 16, PN 25, PN 40, ASA 150, ASA 300, IS 778, IS 6392 Table 17 and IS 1538.

*Valves with Neoprene / Viton / Silicon lining and CF8M (S.S 316) Disc can also be provided at nominal extra cost.

PN 1.6 –
Test Pressure (Hydrostatic) :
Shell : 2.4 MPa
Seat : 1.76 MPa
Maximum Working Pressure : 1.6 MPa
Maximum Working Temperature : 90°C

Suitable For
Water

Materials

P.No.	Name of Part	Material of Construction	Specification	Qty.
1	Gear Box Assembly	– – –	– – –	1
2	Gasket	Steam Jointing Sheet	IS2712 Gr. W/3	1
3	Packing Bush	Bronze	IS 318 Gr. LTB 2	1
4	Upper Stem	Stainless Steel	IS 6603 Gr. 12 Cr12	1
5	Body	S.G Iron	IS 1865 Gr. 400/15	1
6	Disc	Stainless Steel	IS 3444 Gr. 1 / ASTM A 351 Gr. CF8	1
7	Name Plate	Aluminium	– – –	1
8	Bush	Bronze	IS 318 Gr. LTB 2	1
9	Lower Stem	Stainless Steel	IS 6603 Gr. 12 Cr12	1
10	‘O’ Ring	Nitrile Rubber	IS 5192 – 1	1
11	L – Key Screw	Carbon Steel	– – –	1
12	C – Sunk Screw & Nuts	Carbon Steel	– – –	4 Each
13	Handwheel	Sheet Metal	– – –	1
14	Body Lining	EPDM / Nitrile	IS 5192 – 1	1

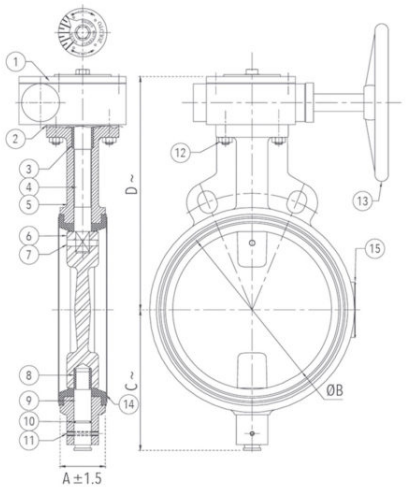

Sizes / Dimensions

Size (Inches)	Size (mm)	A ±1.5	ØB	C ~	D ~
8	200	60	201.6	180	295
10	250	68	252.2	220	320
12	300	78	301.3	250	344

~ ±10

Note : Valves are also available with limit switch (Non-ISI) and Pad lock arrangement at nominal extra cost.

ZOLOTO INDUSTRIES
Zoloto House, 11th Milestone, Lambra, Nakodar Road,
Jalandhar – 144026. Punjab. INDIA
https://www.zolotovalves.com
Phones : +91 181 4676666 (100 Lines)
Facsimile: +91 181 2792500 & 2251600
Email : sales@zolotovalves.com, mktg@zolotovalves.com

ZOLOTO®
VALVES
since 1966

AN ISO 9001, 14001 & 45001
CERTIFIED COMPANY

1078D Butterfly Valve (Wafer Type), PN 1.0 with Pneumatic Actuator

Salient Features

- Design Standard IS 13095 / BS EN 593 (BS 5155).
- Wafer Type.
- Double Acting Pneumatic Actuator Operated.
- S.G Iron construction.
- Stainless Steel (CF8 / CF8M*) Disc which is accurately guided between the two stems.
- Actuator is with position indicator and adjustable center stopper for both open and closed position.
- Scotch Yoke Technology as the most suitable mechanism for valve and damper operation, producing higher torque at both end positions.
- Actuator is without Rack and Pinion for smooth operation and longer life.
- Integrally moulded rubber lining (EPDM / Nitrile / Neoprene* / Viton* / Silicon*) as per requirement which provides seating to the valve disc, as a primary seal to the stem and gasket joint with matching pipe flanges.
- Two Piece Stem design which is precisely guided between the PTFE / Bronze bushes.
- Compatible to sandwich between flanges as per BS 10 Table D, E, F,H, DIN, PN 10, PN 16, PN 25, PN 40, ASA 150, ASA 300, IS 778, IS 6392 Table 17 and IS 1538.

*Valves with Neoprene / Viton / Silicon lining and CF8M (S.S 316) Disc can also be provided at nominal extra cost.

PN 1.0 –
Test Pressure (Hydrostatic) :
Shell : 1.5 MPa
Seat : 1.1 MPa
Maximum Working Pressure : 1.0 MPa
Maximum Working Temperature : 90°C

Suitable For
Water

Materials

P.No.	Name of Part	Material of Construction	Specification	Qty.
1	Pneumatic Actuator	– – –	– – –	1
2	Actuator Base	Carbon Steel	– – –	1
3	Packing Bush	Bronze	IS 318 Gr. LTB 2	1
4	Upper Stem	Stainless Steel	IS 6603 Gr. 12 Cr12	1
5	Body	S.G Iron	IS 1865 Gr. 400/15	1
6	Disc	Stainless Steel	IS 3444 Gr. 1 / ASTM A 351 Gr. CF8	1
7	Studs for Actuator	Carbon Steel	– – –	1
8	Bush	Bronze	IS 318 Gr. LTB 2	1
9	Lower Stem	Stainless Steel	IS 6603 Gr. 12 Cr12	1
10	‘O’ Ring	Nitrile Rubber	IS 5192 – 1	1
11	L – Key Screw	Carbon Steel	– – –	1
12	L – Key Bolts & Nuts	Carbon Steel	– – –	4 Each
13	Locking Washer	Spring Steel	– – –	1
14	Body Lining	EPDM / Nitrile	IS 5192 – 1	1
15	Name Plate	Aluminium	– – –	4
16	Nuts	Carbon Steel	– – –	4
17	Spring Washer	Spring Steel	– – –	4

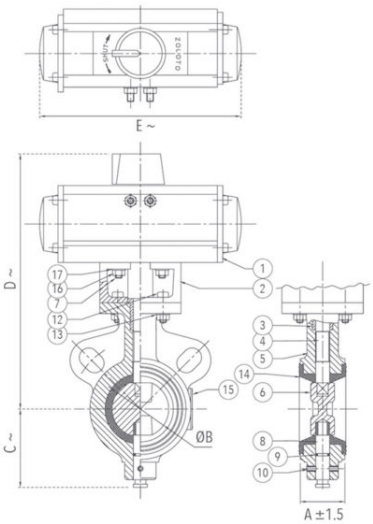

Sizes / Dimensions

Size (Inches)	Size (mm)	A ±1.5	ØB	C ~	D ~	E ~	Actuator Model No.
1 1/2	40	33	40.6	57	223	185	PD 50
2	50	43	52.4	73	235	185	PD 50
2 1/2	65	46	67	80	250	185	PD 50

ZOLOTO INDUSTRIES
Zoloto House, 11th Milestone, Lambra, Nakodar Road,
Jalandhar – 144026. Punjab. INDIA
https://www.zolotovalves.com
Phones : +91 181 4676666 (100 Lines)
Facsimile: +91 181 2792500 & 2251600
Email : sales@zolotovalves.com, mktg@zolotovalves.com

Size (Inches)	Size (mm)	A ±1.5	ØB	C ~	D ~	E ~	Actuator Model No.
3	80	46	81.3	88	258	185	PD 50
4	100	52	101	110	306	250	PD 70
6	150	56	151	151	340	250	PD 70
8	200	60	201.6	180	445	350	PD 100

~ ±10

Note : Valves are also available with Solenoid device and Limit Switch (Position Indicator) at nominal extra cost.

ZOLOTO®
VALVES
since 1966

AN ISO 9001, 14001 & 45001
CERTIFIED COMPANY

1078F Butterfly Valve (Wafer Type), PN 1.0 with Electrical Actuator

Salient Features

- Design Standard IS 13095 / BS EN 593 (BS 5155).
- Wafer Type.
- Electrical Acuator Operated.
- S.G Iron construction.
- Stainless Steel (CF8 / CF8M*) Disc which is accurately guided between the two stems.
- Actuator is with position indicator and adjustable center stopper for both open and closed position.
- Compliant with B.M.S (Building Management System) and PLC (Programmable Logic Control).
- Inbuilt thermal protection and space heater
- IP 67 / IP 68 protection available for outdoor application.
- Inbuilt micro switch position feedback.
- Input Voltage – 230 VAC/24 VDC* power supply.
- Integrally moulded rubber lining (EPDM / Nitrile / Neoprene* / Viton* / Silicon*) as per requirement which provides seating to the valve disc, as a primary seal to the stem and gasket joint with matching pipe flanges.
- Two Piece Stem design which is precisely guided between the PTFE / Bronze bushes.
- Compatible to sandwich between flanges as per BS 10 Table D, E, F,H, DIN, PN 10, PN 16, PN 25, PN 40, ASA 150, ASA 300, IS 778, IS 6392 Table 17 and IS 1538.
- For manual operation allen key is provided.
- Instrumental in Zero Water Waste installations.

*Valves with Neoprene / Viton / Silicon lining, IS 3444 Gr.4 /CF8M (S.S 316) Disc and 24VDC Input Voltage can also be provided at nominal extra cost.

PN 1.0 –
Test Pressure (Hydrostatic) :
Shell : 1.5 MPa
Seat : 1.1 MPa
Maximum Working Pressure : 1.0 MPa
Maximum Working Temperature : 90°C

Important Note : Advised to use canopy for enhanced protection from continuous weather exposure.

Suitable For
Water

Materials

P.No.	Name of Part	Material of Construction	Specification	Qty.
1	Electric Actuator	– – –	– – –	1
2	Actuator Base	S.G. Iron	IS 1865 Gr. 400/15	1
3	Packing Bush	Bronze	IS 318 Gr. LTB 2	1
4	Upper Stem	Stainless Steel	IS 6603 Gr. 12 Cr12	1
5	Body	S.G Iron	IS 1865 Gr. 400/15	1
6	Disc	Stainless Steel	IS 3444 Gr. 1 / ASTM A351 Gr. CF8	1
7	Studs for Actuator	Carbon Steel	IS 1367	4
8	Bush	Bronze	IS 318 Gr. LTB 2	1
9	Lower Stem	Stainless Steel	IS 6603 Gr. 12 Cr12	1
10	‘O’ Ring	Nitrile Rubber	IS 5192 – 1	1
11	L – Key Screw	Carbon Steel	– – –	1
12	L-Key Bolts & Nuts	Carbon Steel	– – –	4 Each
13	Locking Washer	Spring Steel	– – –	4 Each
14	Body Lining	EPDM / Nitrile	IS 5192 – 1	1
15	Name Plate	Aluminium	– – –	1
16	Nuts	Carbon Steel	IS 1363 Part 3 Class 4.0	4
17	Spring Washer	Spring Steel	– – –	4

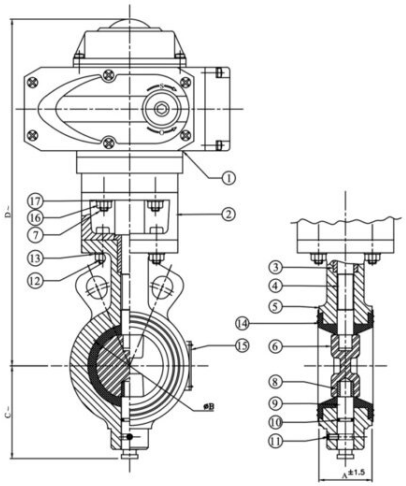

ZOLOTO INDUSTRIES
Zoloto House, 11th Milestone, Lambra, Nakodar Road,
Jalandhar – 144026. Punjab. INDIA
https://www.zolotovalves.com
Phones : +91 181 4676666 (100 Lines)
Facsimile: +91 181 2792500 & 2251600
Email : sales@zolotovalves.com, mktg@zolotovalves.com

Sizes / Dimensions

Size (Inches)	Size (mm)	A ±1.5	ØB	C ~	D ~	Actuator Model No.
1 1/2	40	33	40.6	57	283	ZSY 1
2	50	43	52.4	73	293	ZSY 1
2 1/2	65	46	67	80	306	ZSY 1
3	80	46	81.3	88	313	ZSY 1
4	100	52	101	110	341	ZSY 1
5	125	56	127.1	122	342	ZSY 2
6	150	56	151	151	370	ZSY 2
8	200	60	201.6	180	427	ZSY 2
10	250	68	252.2	220	516	ZSY 4
12	300	78	301.3	250	540	ZSY 4
14	350	86	352	295	610	ZSY 6

~ ±10

Note : Valves are also available with Control Panel, Magnetic Sensor for automated tank filling.

ZOLOTO®
VALVES
since 1966

AN ISO 9001, 14001 & 45001
CERTIFIED COMPANY

1078G Butterfly Valve (Wafer Type), PN 2.5 with S.G Iron Disc

Salient Features

- Design Standard IS 13095 / BS EN 593 (BS 5155).
- Wafer Type.
- Lever Operated.
- S.G Iron construction.
- S.G Iron disc which is accurately guided between the two stems.
- Integrally moulded rubber lining (EPDM / Nitrile / Neoprene* / Viton* / Silicon*) as per requirement which provides seating to the valve disc, as a primary seal to the stem and gasket joint with matching pipe flanges.
- Two Piece Stem design which is precisely guided between the PTFE / Bronze bushes.
- Compatible to sandwich between flanges as per BS 10 Table D, E, F,H, DIN, PN 10, PN 16, PN 25, PN 40, ASA 150, ASA 300, IS 778, IS 6392 Table 17 and IS 1538.

*Valves with Neoprene / Viton / Silicon lining can also be provided at nominal extra cost.

PN 2.5 –
Test Pressure (Hydrostatic) :
Shell : 3.75 MPa
Seat : 2.75 MPa
Maximum Working Pressure : 2.5 MPa
Maximum Working Temperature : 90°C

Suitable For
Water

Materials

P.No.	Name of Part	Material of Construction	Specification	Qty.
1	Flow Control Lever	Carbon Steel (Powder Coated)	– – –	1
2	Notch Plate	Carbon Steel (Powder Coated)	– – –	1
3	Packing Bush	PTFE	– – –	1
4	Upper Stem	Stainless Steel	IS 6603 Gr. 12 Cr12	1
5	Body	S.G Iron	IS 1865 Gr. 400/15	1
6	Disc	S.G Iron (Epoxy Coated)	IS 1865 Gr. 400/15	1
7	Taper Pin (Optional)	Stainless Steel	IS 6603 Gr. 12 Cr12	1
8	Bush	Bronze	IS 318 Gr. LTB 2	1
9	Lower Stem	Stainless Steel	IS 6603 Gr. 12 Cr12	1
10	‘O’ Ring	Nitrile Rubber	IS 5192 – 1	1
11	L – Key Screw	Carbon Steel	– – –	1
12	C – Sunk Screw & Nuts	Carbon Steel	– – –	2 Each
13	Locking Washer	Spring Steel	– – –	2
14	Boby Lining	EPDM / Nitrile	IS 5192 – 1	1
15	Name Plate	Aluminium	– – –	1

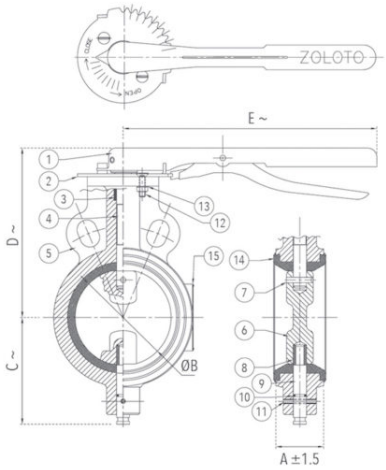

Sizes / Dimensions

Size (Inches)	Size (mm)	A ±1.5	ØB	C ~	D ~	E ~
1 1/2	40	33	40.6	57	113	260
2	50	43	53	73	125	260
2 1/2	65	46	67.5	80	140	260
3	80	46	81.3	88	145	260
4	100	52	101.5	110	178	260
5	125	56	127.1	122	190	260
6	150	56	151.5	151	204	260

~ ±10

NOTE : Valves are also available with limit switch, Pad lock arrangement and gear arrangement at nominal extra cost.

ZOLOTO INDUSTRIES
Zoloto House, 11th Milestone, Lambra, Nakodar Road,
Jalandhar – 144026. Punjab. INDIA
https://www.zolotovalves.com
Phones : +91 181 4676666 (100 Lines)
Facsimile: +91 181 2792500 & 2251600
Email : sales@zolotovalves.com, mktg@zolotovalves.com

ZOLOTO®
VALVES
since 1966

AN ISO 9001, 14001 & 45001
CERTIFIED COMPANY

1078H Butterfly Valve (Wafer Type), PN 2.5 with S.G Iron Disc - Gear Operated

Salient Features

- Design Standard IS 13095 / BS EN 593 (BS 5155).
- Wafer Type.
- Gear Operated.
- S.G Iron construction.
- S.G Iron disc which is accurately guided between the two stems.
- Integrally moulded rubber lining (EPDM / Nitrile / Neoprene* / Viton* / Silicon*) as per requirement which provides seating to the valve disc, as a primary seal to the stem and gasket joint with matching pipe flanges.
- Two Piece Stem design which is precisely guided between the PTFE / Bronze bushes.
- Compatible to sandwich between flanges as per BS 10 Table D, E, F,H, DIN, PN 10, PN 16, PN 25, PN 40, ASA 150, ASA 300, IS 778, IS 6392 Table 17 and IS 1538.

*Valves with Neoprene / Viton / Silicon lining can also be provided at nominal extra cost.

PN 2.5 –
Test Pressure (Hydrostatic) :
Shell : 3.75 MPa
Seat : 2.75 MPa
Maximum Working Pressure : 2.5 MPa
Maximum Working Temperature : 90°C

Suitable For
Water

Materials

P.No.	Name of Part	Material of Construction	Specification	Qty.
1	Gear Box Assembly	– – –	– – –	1
2	Gasket	Steam Jointing Sheet	IS2712 Gr. W/3	1
3	Packing Bush	Bronze	IS 318 Gr. LTB 2	1
4	Upper Stem	Stainless Steel	IS 6603 Gr. 12 Cr12	1
5	Body	S.G Iron	IS 1865 Gr. 400/15	1
6	Disc	S. G Iron (Epoxy Coated)	IS 1865 Gr. 400/15	1
7	Taper Pin (Optional)	Stainless Steel	IS 6603 Gr. 12 Cr12	1
8	Bush	Bronze	IS 318 Gr. LTB 2	1
9	Lower Stem	Stainless Steel	IS 6603 Gr. 12 Cr12	1
10	'O' Ring	Nitrile Rubber	IS 5192 – 1	1
11	L – Key Screw	Carbon Steel	– – –	1
12	C – Sunk Screw & Nuts	Carbon Steel	– – –	4 Each
13	Handwheel	Sheet Metal	– – –	1
14	Body Lining	EPDM / Nitrile	IS 5192 – 1	1
15	Name Plate	Aluminium	– – –	1

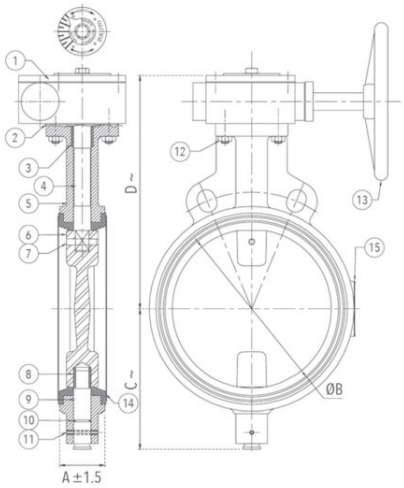

Sizes / Dimensions

Size (Inches)	Size (mm)	A ±1.5	ØB	C~	D~
8	200	60	201.6	180	295
10	250	68	252.2	220	320
12	300	78	301.8	250	344

~ ±10

Note : Valves are also available with limit switch and Pad lock arrangement at nominal extra cost.

ZOLOTO INDUSTRIES
Zoloto House, 11th Milestone, Lambra, Nakodar Road,
Jalandhar – 144026. Punjab. INDIA
https://www.zolotovalves.com
Phones : +91 181 4676666 (100 Lines)
Facsimile: +91 181 2792500 & 2251600
Email : sales@zolotovalves.com, mktg@zolotovalves.com

ZOLOTO®
VALVES
since 1966

AN ISO 9001, 14001 & 45001
CERTIFIED COMPANY

1078J Butterfly Valve (Wafer Type), PN 2.5 with S.S 304 Disc - Gear Operated

Salient Features

- Design Standard IS 13095 / BS EN 593 (BS 5155).
- Wafer Type.
- Gear Operated.
- S.G Iron construction.
- Stainless Steel (CF8 / CF8M*) Disc which is accurately guided between the two stems.
- Integrally moulded rubber lining (EPDM / Nitrile / Neoprene* / Viton* / Silicon*) as per requirement which provides seating to the valve disc, as a primary seal to the stem and gasket joint with matching pipe flanges.
- Two Piece Stem design which is precisely guided between the PTFE / Bronze bushes.
- Compatible to sandwich between flanges as per BS 10 Table D, E, F,H, DIN, PN 10, PN 16, PN 25, PN 40, ASA 150, ASA 300, IS 778, IS 6392 Table 17 and IS 1538.

*Valves with Neoprene / Viton / Silicon lining and CF8M (S.S 316) Disc can also be provided at nominal extra cost.

PN 2.5 –
Test Pressure (Hydrostatic) :
Shell : 3.75 MPa
Seat : 2.75 MPa
Maximum Working Pressure : 2.5 MPa
Maximum Working Temperature : 90°C

Suitable For
Water

Materials

P.No.	Name of Part	Material of Construction	Specification	Qty.
1	Gear Box Assembly	– – –	– – –	1
2	Gasket	Steam Jointing Sheet	IS 2712 Gr. W/3	1
3	Packing Bush	Bronze	IS 318 Gr. LTB 2	1
4	Upper Stem	Stainless Steel	IS 6603 Gr. 12 Cr12	1
5	Body	S.G Iron	IS 1865 Gr. 400/15	1
6	Disc	Stainless Steel	IS 3444 Gr. 1 / ASTM A 351 Gr. CF8	1
7	Name Plate	Aluminium	– – –	1
8	Bush	Bronze	IS 318 Gr. LTB 2	1
9	Lower Stem	Stainless Steel	IS 6603 Gr. 12 Cr12	1
10	‘O’ Ring	Nitrile Rubber	IS 5192 – 1	1
11	L – Key screw	Carbon Steel	– – –	1
12	C – Sunk Screw & Nuts	Carbon Steel	– – –	4 Each
13	Handwheel	Sheet Metal	– – –	1
14	Body Lining	EPDM / Nitrile	IS 5192 – 1	1

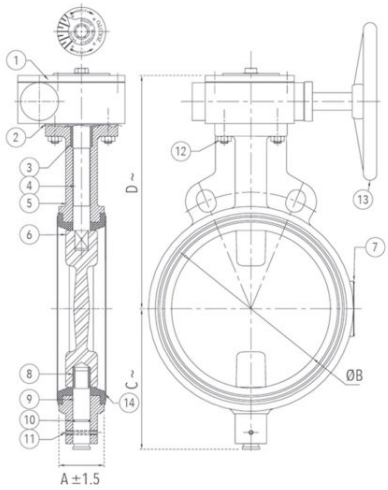

Sizes / Dimensions

Size (Inches)	Size (mm)	A ±1.5	ØB	C ~	D ~
8	200	60	201.6	180	295
10	250	68	252.2	220	320
12	300	78	301.8	250	344

~ ±10

Note : Valves are also available with limit switch and Pad lock arrangement at nominal extra cost.

ZOLOTO INDUSTRIES
Zoloto House, 11th Milestone, Lambra, Nakodar Road,
Jalandhar – 144026. Punjab. INDIA
https://www.zolotovalves.com
Phones : +91 181 4676666 (100 Lines)
Facsimile: +91 181 2792500 & 2251600
Email : sales@zolotovalves.com, mktg@zolotovalves.com

ZOLOTO®
VALVES
since 1966

AN ISO 9001, 14001 & 45001
CERTIFIED COMPANY

1078K Butterfly Valve (Wafer Type), PN 1.6 with Electrical Actuator

Salient Features

- Design Standard IS 13095 / BS EN 593 (BS 5155).
- Wafer Type.
- Electrical Acuator Operated.
- S.G Iron construction.
- Stainless Steel (CF8 / CF8M*) Disc which is accurately guided between the two stems.
- Actuator is with position indicator and adjustable center stopper for both open and closed position.
- Compliant with B.M.S (Building Management System) and PLC (Programmable Logic Control).
- Inbuilt thermal protection and space heater
- IP 67 / IP 68 protection available for outdoor application.
- Inbuilt micro switch position feedback.
- Input Voltage – 230 VAC/24 VDC* power supply.
- Integrally moulded rubber lining (EPDM / Nitrile / Neoprene* / Viton* / Silicon*) as per requirement which provides seating to the valve disc, as a primary seal to the stem and gasket joint with matching pipe flanges.
- Two Piece Stem design which is precisely guided between the PTFE / Bronze bushes.
- Compatible to sandwich between flanges as per BS 10 Table D, E, F,H, DIN, PN 10, PN 16, PN 25, PN 40, ASA 150, ASA 300, IS 778, IS 6392 Table 17 and IS 1538.
- For manual operation allen key is provided.
- Instrumental in Zero Water Waste installations.

*Valves with Neoprene / Viton / Silicon lining, IS 3444 Gr.4 /CF8M (S.S 316) Disc and 24VDC Input Voltage can also be provided at nominal extra cost.

PN 1.6 –
Test Pressure (Hydrostatic) :
Shell : 2.4 MPa
Seat : 1.76 MPa
Maximum Working Pressure : 1.6 MPa
Maximum Working Temperature : 90°C

Important Note : Advised to use canopy for enhanced protection from continuous weather exposure.

Suitable For
Water

Materials

P.No.	Name of Part	Material of Construction	Specification	Qty.
1	Electric Actuator	– – –	– – –	1
2	Actuator Base	S.G. Iron	IS 1865 Gr. 400/15	1
3	Packing Bush	Bronze	IS 318 Gr. LTB 2	1
4	Upper Stem	Stainless Steel	IS 6603 Gr. 12 Cr12	1
5	Body	S.G Iron	IS 1865 Gr. 400/15	1
6	Disc	Stainless Steel	IS 3444 Gr. 1 / ASTM A351 Gr. CF8	1
7	Studs for Actuator	Carbon Steel	– – –	4
8	Bush	Bronze	IS 318 Gr. LTB 2	1
9	Lower Stem	Stainless Steel	IS 6603 Gr. 12 Cr12	1
10	‘O’ Ring	Nitrile Rubber	IS 5192 – 1	1
11	L – Key Screw	Carbon Steel	– – –	1
12	L-Key Bolts & Nuts	Carbon Steel	– – –	4 Each
13	Locking Washer	Spring Steel	– – –	4 Each
14	Body Lining	EPDM / Nitrile	IS 5192 – 1	1
15	Name Plate	Aluminium	– – –	1
16	Nuts	Carbon Steel	IS 1363 Part 3 Class 4.0	4
17	Spring Washer	Spring Steel	– – –	4

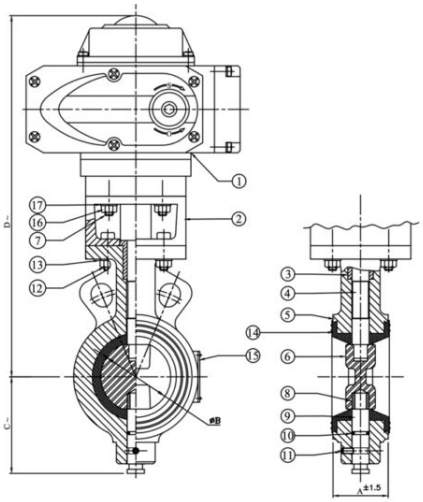

ZOLOTO INDUSTRIES
Zoloto House, 11th Milestone, Lambra, Nakodar Road,
Jalandhar – 144026. Punjab. INDIA
https://www.zolotovalves.com
Phones : +91 181 4676666 (100 Lines)
Facsimile: +91 181 2792500 & 2251600
Email : sales@zolotovalves.com, mktg@zolotovalves.com

Sizes / Dimensions

Size (Inches)	Size (mm)	A ±1.5	ØB	C ~	D ~	Actuator Model No.
1 1/2	40	33	40.6	57	283	ZSY 1
2	50	43	52.4	73	293	ZSY 1
2 1/2	65	46	67	80	306	ZSY 1
3	80	46	81.3	88	313	ZSY 1
4	100	52	101	110	333	ZSY 2
5	125	56	127.1	122	342	ZSY 2
6	150	56	151	151	370	ZSY 2
8	200	60	201.6	180	485	ZSY 3
10	250	68	252.2	220	516	ZSY 4
12	300	78	301.3	250	540	ZSY 4

~ ±10

Note : Valves are also available with Control Panel, Magnetic Sensor for automated tank filling system.

ZOLOTO®
VALVES
since 1966

AN ISO 9001, 14001 & 45001 CERTIFIED COMPANY

1079A Cast Iron Sluice Valve PN 1.0 (Flanged)

IS 14846 CM/L-9761093

Salient Features

- Design Standard IS 14846 PN 1.0.
- Bolted Bonnet, Inside Screw, Non-Rising Stem.
- Rigid and Sturdy design.
- Handwheel Operated.
- Flange Ends as per IS 1538.

Test Pressure (Hydrostatic) :
Shell : 1.5 MPa
Seat : 1.0 MPa
Maximum Working Temperature : 45°C

Suitable For
Water

Materials

P.No.	Name of Part	Material of Construction	Specification	Qty.
1	Body	Cast Iron	IS 210 Gr. FG 200	1
2	Seat Ring	Bronze	IS 318 Gr. LTB2	4
3	Wedge	Cast Iron	IS 210 Gr. FG 200	1
4	Stem Bush	Bronze	IS 318 Gr. LTB2	1
5	Gasket	Rubber	IS 638 Type B	1
6	Bonnet	Cast Iron	IS 210 Gr. FG 200	1
7	Stem	Stainless Steel	IS 6603 Gr. 12 Cr. 12	1
8	Gasket	Rubber	IS 638 Type B	1
9	Stuffing Box	Cast Iron	IS 210 Gr. FG 200	1
10	Gland Packing	Hemp & Jute	IS 5414	–
11	Gland Flange	Cast Iron	IS 210 Gr. FG 200	1
12	Handwheel	Cast Iron	IS 210 Gr. FG 200	1
13	Washer	Carbon Steel	– – –	1
14	Bolt	Carbon Steel	IS 1363 Part 1 Class 4.6	1
15	Bolt & Nut	Carbon Steel	IS 1363 Part 1 Class 4.6 IS 1363 Part 3 Class 4.0	As Reqd.
16	Stud / Bolt	Carbon Steel	IS 1363 Part 1 Class 4.6	2
17	Nut	Carbon Steel	IS 1363 Part 3 Class 4.0	As Reqd.

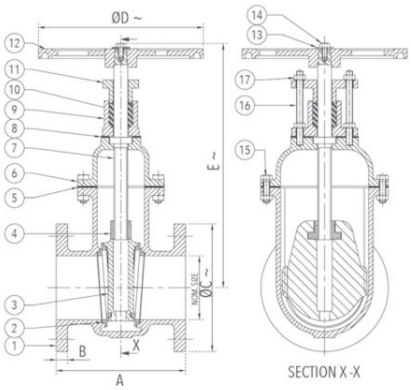

Sizes / Dimensions

Size (Inches)	Size (mm)	A	B	ØC	ØD ±5.0	E (Max.)
2*	50	178 ±2	16 +2	165 (+1.5/-1.0)	225	365
2 1/2*	65	190 ±2	16 +2	185 (+1.5/-1.0)	225	380
3	80	203 ±2	21 ±3	200 ±4.5	225	425
4	100	229 ±2	22 ±3	220 ±4.5	320	470
5	125	254 ±2	22.5 ±3	250 ±4.5	320	485
6	150	267 ±2	23 ±3	285 (+5.5/-2.5)	320	595
8	200	292 ±2	24.5 ±3	340 (+5.5/-2.5)	360	725
10	250	330 ±2	26 ±3	395 (+5.5/-2.5)	400	835
12	300	356 ±2	27.5 ±3	445 (+5.5/-2.5)	400	910
14*1	350*1	381 ±3	29 ±3	505 (+6.5/-3.0)	500	1020
16*1	400*1	406 ±3	30 ±3	565 (+6.5/-3.0)	640	1110
18*1	450*1	432 ±3	31.5 ±3	615 (+6.5/-3.0)	720	1200

ZOLOTO INDUSTRIES
Zoloto House, 11th Milestone, Lambra, Nakodar Road,
Jalandhar – 144026. Punjab. INDIA
https://www.zolotovalves.com
Phones : +91 181 4676666 (100 Lines)
Facsimile: +91 181 2792500 & 2251600
Email : sales@zolotovalves.com, mktg@zolotovalves.com

Size (Inches)	Size (mm)	A	B	ØC	ØD ±5.0	E (Max.)
24[*1]	600[*1]	508 ±3	36 ±3	780 (+6.5/-3.0)	720	1500

* Flanges as per IS 14846.
[*1] IS Certification for these sizes is currently under process.

NOTE : Valves are also available with extended stem, Pad lock arrangement, Limit switch and Brass spindle at a nominal extra cost. By Pass arrangement (for sizes 200mm & above) can also be provided at a nominal extra cost.

ZOLOTO®
VALVES
since 1966

AN ISO 9001, 14001 & 45001
CERTIFIED COMPANY

1079B Cast Iron Sluice Valve PN 1.6 (Flanged)

IS 14846
CM/L-9761093

Salient Features

- Design Standard IS 14846 PN 1.6.
- Bolted Bonnet, Inside Screw, Non-Rising Stem.
- Rigid and Sturdy design.
- Handwheel Operated.
- Flange Ends as per IS 1538.

Test Pressure (Hydrostatic) :
Shell : 2.4 MPa
Seat : 1.6 MPa
Maximum Working Temperature : 45°C

Suitable For
Water

Materials

P.No.	Name of Part	Material of Construction	Specification	Qty.
1	Body	Cast Iron	IS 210 Gr. FG 200	1
2	Body Seat Ring	Bronze	IS 318 Gr. LTB 2	2
3	Wedge Ring	Bronze	IS 318 Gr. LTB 2	2
4	Wedge	Cast Iron	IS 210 Gr. FG 200	1
5	Stem Bush	Bronze	IS 318 Gr. LTB 2	1
6	Gasket	Rubber	IS 638 Type B	1
7	Bonnet	Cast Iron	IS 210 Gr. FG 200	1
8	Stem	Stainless Steel	IS 6603 Gr. 12 Cr. 12	1
9	Bolts	Carbon Steel	IS 1363 Part 1 Class 4.6	To Suit
10	Nuts	Carbon Steel	IS 1363 Part 3 Class 4.0	To Suit
11	Gland Packing	Hemp & Jute	IS 5414	–
12	Gland Flange	Cast Iron	IS 210 Gr. FG 200	1
13	Handwheel	Cast Iron	IS 210 Gr. FG 200	1
14	Washer	Carbon Steel	– – –	1
15	Bolt	Carbon Steel	IS 1363 Part 1 Class 4.6	1
16	Nuts	Carbon Steel	IS 1363 Part 3 Class 4.0	2
17	Bolts	Carbon Steel	IS 1363 Part 1 Class 4.6	2
18	Thrust Plate	Cast Iron	IS 210 Gr. FG 200	1
19	Stuffing Box	Cast Iron	IS 210 Gr. FG 200	1
20	Bolts	Carbon Steel	IS 1363 Part 1 Class 4.6	To Suit
21	Nuts	Carbon Steel	IS 1363 Part 3 Class 4.0	To Suit
22	Gasket	Rubber	IS 638 Type B	1

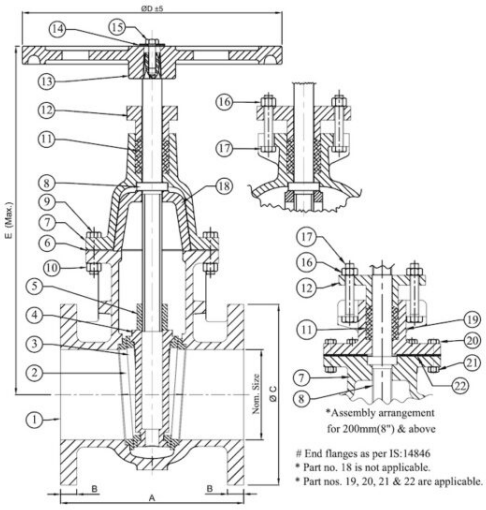

Sizes / Dimensions

Size (Inches)	Size (mm)	A	B	ØC	ØD ±5	E (Max.)
2*	50	178 ±2	16 +2	165 (+1.5/-1.0)	280	365
2 1/2*	65	190 ±2	16 +2	185 (+1.5/-1.0)	280	380
3	80	203 ±2	21 ±3	200 ±4.5	280	425
4	100	229 ±2	22 ±3	220 ±4.5	360	470
5	125	254 ±2	22.5 ±3	250 ±4.5	360	485
6	150	267 ±2	23 ±3	285 (+5.5/-2.5)	360	595
8#	200#	292 ±3	24.5 ±3	340 (+5.5/-2.5)	450	725
10#	250#	330 ±3	26 ±3	395 (+5.5/-2.5)	640	835

ZOLOTO INDUSTRIES
Zoloto House, 11th Milestone, Lambra, Nakodar Road,
Jalandhar – 144026. Punjab. INDIA
https://www.zolotovalves.com
Phones : +91 181 4676666 (100 Lines)
Facsimile: +91 181 2792500 & 2251600
Email : sales@zolotovalves.com, mktg@zolotovalves.com

Size (Inches)	Size (mm)	A	B	ØC	ØD ±5	E (Max.)
12#	300#	356 ±3	27.5 ±3	445 (+5.5/-2.5)	640	910

* Flanges as per IS 14846.
# For size 200, 250 and 300 part number 18 is not applicable.

NOTE : Valves are also available with extended stem, Pad lock arrangement, Limit switch and Brass spindle at a nominal extra cost. By Pass arrangement (for sizes 200mm & above) can also be provided at a nominal extra cost.

ZOLOTO®
VALVES
since 1966

AN ISO 9001, 14001 & 45001
CERTIFIED COMPANY

1079C Cast Iron Sluice Valve PN 1.0 (Flanged) with Rising Stem

Salient Features

- Design Reference Standard IS 14846.
- Bolted Bonnet, Outside Screw, Yoke Type, Rising Spindle, Solid Wedge.
- Rigid and Sturdy design.
- Hand wheel operated.
- Flanged ends to IS 1538.
- Provision of Re-Packing under pressure.

Test Pressure (Hydrostatic) :
Shell : 1.5 MPa
Seat : 1.0 MPa
Maximum Working Temperature : 45°C

Suitable For
Water

Materials

P.No.	Name of Part	Material of Construction	Specification	Qty.
1	Body	Cast Iron	IS 210 Gr. FG 200	1
2	Seat Ring	Bronze	IS 318 Gr. LTB 2	4
3	Wedge	Cast Iron	IS 210 Gr. FG 200	1
4	Stem	Stainless Steel	IS 6603 Gr. 12 Cr. 12	1
5	Gasket	Rubber	IS 638 Type B	1
6	Bonnet	Cast Iron	IS 210 Gr. FG 200	1
7	Bolt	Carbon Steel	IS 1363 Part 1 Class 4.6	As Reqd.
8	Nut	Carbon Steel	IS 1363 Part 3 Class 4.0	As Reqd.
9	Gland Packing	Hemp. & Jute	IS 5414	–
10	Gland Flange	Cast Iron	IS 210 Gr. FG 200	1
11	Bolt	Carbon Steel	IS 1363 Part 1 Class 4.6	2
12	Nut	Carbon Steel	IS 1363 Part 3 Class 4.0	2
13	Sleeve	S.G Iron	IS 1865	1
14	Sleeve Nut	Stainless Steel	IS 6603 Gr. 12 Cr. 12	1
15	Handwheel	Cast Iron	IS 210 Gr. FG 200	1
16	Handwheel Nut	Stainless Steel	IS 6603 Gr. 12 Cr. 12	1
17	Back Seat Bush	Bronze	IS 318 Gr. LTB 2	1

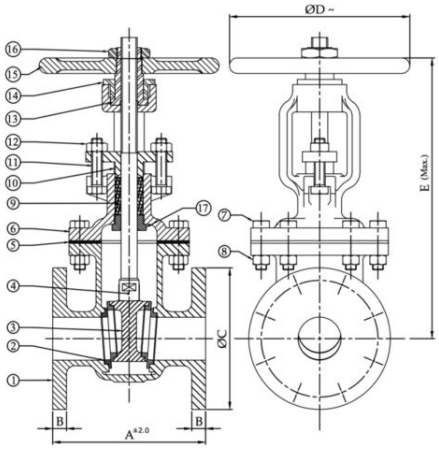

Sizes / Dimensions

Size (Inches)	Size (mm)	A ±2	B	ØC	ØD ~	E (Max.)
2*	50	178	16 +2	165 (+1.5/-1.0)	210	350
2 1/2*	65	190	16 +2	185 (+1.5/-1.0)	210	410
3	80	203	21 ±3	200 ±4.5	225	455
4	100	229	22 ±3	220 ±4.5	255	540
5	125	254	22.5 ±3	250 ±4.5	255	588
6	150	267	23 ±3	285 (+5.5/-2.5)	310	655
8	200	292	24.5 ±3	340 (+5.5/-2.5)	395	780
10	250	330	26 ±3	395 (+5.5/-2.5)	460	960
12	300	356	27.5 ±3	445 (+5.5/-2.5)	460	1140

~ ±10
* Flanges as per IS 14846.
NOTE : Valves are also available with brass spindle and Pad lock arrangement at a nominal extra cost. By Pass arrangement (for sizes 200mm & above) can also be provided at a nominal extra cost.

ZOLOTO INDUSTRIES
Zoloto House, 11th Milestone, Lambra, Nakodar Road,
Jalandhar – 144026. Punjab. INDIA
https://www.zolotovalves.com
Phones : +91 181 4676666 (100 Lines)
Facsimile: +91 181 2792500 & 2251600
Email : sales@zolotovalves.com, mktg@zolotovalves.com

ZOLOTO®
VALVES
since 1966

AN ISO 9001, 14001 & 45001
CERTIFIED COMPANY

1079D Cast Iron Sluice Valve PN 1.6 (Flanged) with Rising Stem

Salient Features

- Design Reference Standard IS 14846.
- Bolted Bonnet, Outside Screw, Yoke Type, Rising Spindle, Solid Wedge.
- Rigid and Sturdy design.
- Hand wheel operated.
- Flanged ends to IS 1538.
- Provision of Re-Packing under pressure.

Test Pressure (Hydrostatic) :
Shell : 2.4 MPa
Seat : 1.6 MPa
Maximum Working Temperature : 45°C

Suitable For
Water

Materials

P.No.	Name of Part	Material of Construction	Specification	Qty.
1	Body	Cast Iron	IS 210 Gr. FG 200	1
2	Seat Ring	Bronze	IS 318 Gr. LTB 2	4
3	Wedge	Cast Iron	IS 210 Gr. FG 200	1
4	Stem	Stainless Steel	IS 6603 Gr. 12 Cr. 12	1
5	Gasket	Rubber	IS 638 Type B	1
6	Bonnet	Cast Iron	IS 210 Gr. FG 200	1
7	Bolt	Carbon Steel	IS 1363 Part 1 Class 4.6	As Reqd.
8	Nut	Carbon Steel	IS 1363 Part 3 Class 4.0	As Reqd.
9	Gland Packing	Hemp. & Jute	IS 5414	–
10	Gland Flange	Cast Iron	IS 210 Gr. FG 200	1
11	Bolt	Carbon Steel	IS 1363 Part 1 Class 4.6	2
12	Nut	Carbon Steel	IS 1363 Part 3 Class 4.0	2
13	Sleeve	S.G Iron	IS 1865	1
14	Sleeve Nut	Stainless Steel	IS 6603 Gr. 12 Cr. 12	1
15	Handwheel	Cast Iron	IS 210 Gr. FG 200	1
16	Washer	Carbon Steel	– – –	1
17	Handwheel Nut	Stainless Steel	IS 6603 Gr. 12 Cr. 12	1
18	Back Seat Bush	Bronze	IS 318 Gr. LTB 2	1

Sizes / Dimensions

Size (Inches)	Size (mm)	A ±2	B	ØC	ØD ~	E (Max.)
2*	50	178	16 +2	165 (+1.5/-1.0)	210	350
2 1/2*	65	190	16 +2	185 (+1.5/-1.0)	210	410
3	80	203	21 ±3	200 ±4.5	225	455
4	100	229	22 ±3	220 ±4.5	255	540
6	150	267	23 ±3	285 (+5.5/-2.5)	310	655
8	200	292	24.5 ±3	340 (+5.5/-2.5)	395	780
10	250	330	26 ±3	395 (+5.5/-2.5)	460	960
12	300	356	27.5 ±3	445 (+5.5/-2.5)	460	1140

~ ±10
* Flanges as per IS 14846.
NOTE : Valves are also available with brass spindle and Pad lock arrangement at a nominal extra cost. By Pass arrangement (for sizes 200mm & above) can also be provided at a nominal extra cost.

ZOLOTO INDUSTRIES
Zoloto House, 11th Milestone, Lambra, Nakodar Road,
Jalandhar – 144026. Punjab. INDIA
https://www.zolotovalves.com
Phones : +91 181 4676666 (100 Lines)
Facsimile: +91 181 2792500 & 2251600
Email : sales@zolotovalves.com, mktg@zolotovalves.com

ZOLOTO®
VALVES
since 1966

AN ISO 9001, 14001 & 45001
CERTIFIED COMPANY

1082 Cast Iron Dual Plate Wafer Type Check Valve, PN 16

Salient Features

- Design standard API 594.
- Wafer Type Design, to take lesser space than the conventional Check Valve.
- Being light in weight, is more rigid than the standard Swing Type Check Valve, which needs expensive foundation and special supports.
- Being cylindrical body, stresses are uniformly distributed.
- Much longer seat life because of Bronze / S.S to Rubber contact.
- Less wear and tear of seat surfaces.
- End connections are designed to suit flanges drilled to ANSI B Class-125 / ASME B Class-150.
- Water hammering effect is minimized in this design, since the closing of valve does not depend upon any back pressure or flow.
- Each plate being half of the size of the swing check valve disc, provides straight flow path offering minimal resistance because of the spring's assistance as closing of the valve initiates as soon as flow velocity dips below the designated minimum velocity.

Test Pressure (Hydrostatic) :
Shell : 24.50 kg/cm²g (350 psig)
Seat : 16 kg/cm²g (230 psig)
Maximum Working Temperature : 80°C

Suitable For
Water

Materials

P.No.	Name of Part	Material of Construction	Specification	Qty.
1	Body	Cast Iron	IS 210 Gr. FG 200	1
2	Body Lining	Nitrile Rubber	IS 5192 – 1	1
3	Flap / Disc	Stainless Steel / Bronze	ASTM A 351 Gr. CF8/CF8M / IS 318 Gr. LTB2	2
4	Hinge Pin	Stainless Steel	ASTM A 276 Type 304	1
5	Stop Pin	Stainless Steel	ASTM A 276 Type 304	1
6	Spring	Stainless Steel	Type 304	–
7	Packing Washer	Stainless Steel/PTFE	ASTM A 276 Type 304 / – – –	–
8	Packing Washer	Nitrile Rubber / PTFE	IS : 5192-1 / – – –	–
9	Retainer Plug	Carbon Steel	– – –	2/4

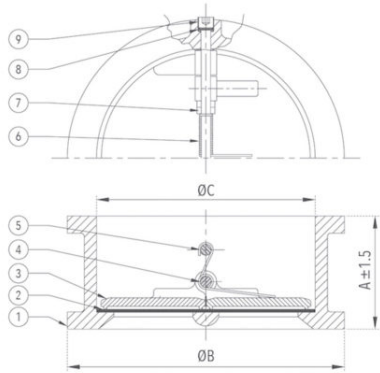

Sizes / Dimensions

Size (Inches)	Size (mm)	A	ØB	ØC
1 1/2	40	50	92	56
2	50	54	101	60
2 1/2	65	60	120	73
3	80	67	133	89
4	100	67	171	114
5	125	83	193	141
6	150	95	218	168
8	200	127	276	219
10	250	140	336	273.5
12	300	181	406	324
14*	350*	184	451	357

*Flap / Disc for Size 350 is of Bronze.

ZOLOTO INDUSTRIES
Zoloto House, 11th Milestone, Lambra, Nakodar Road,
Jalandhar – 144026. Punjab. INDIA
https://www.zolotovalves.com
Phones : +91 181 4676666 (100 Lines)
Facsimile: +91 181 2792500 & 2251600
Email : sales@zolotovalves.com, mktg@zolotovalves.com

ZOLOTO®
VALVES
since 1966

AN ISO 9001, 14001 & 45001
CERTIFIED COMPANY

1082A Ductile Iron Dual Plate Wafer Type Check Valve, PN 16

Salient Features

- Design Reference Standard API 594.
- Wafer Type Design, to take lesser space than the conventional Check Valve.
- Being light in weight, is more rigid than the standard Swing Type Check Valve, which needs expensive foundation and special supports.
- Being cylindrical body, stresses are uniformly distributed.
- Much longer seat life because of S.S to Rubber contact.
- Less wear and tear of seat surfaces.
- End connections are designed to suit flanges drilled to ANSI B Class-125 / ASME B Class-150.
- Water hammering effect is minimized in this design, since the closing of valve does not depend upon any back pressure or flow.
- Each plate being half of the size of the swing check valve disc, provides straight flow path offering minimal resistance because of the spring's assistance as closing of the valve initiates as soon as flow velocity dips below the designated minimum velocity.

Test Pressure (Hydrostatic) :
Shell : 24 bar
Seat : 17.6 bar
Maximum Working Temperature : -18°C to 80°C

Suitable For
Water

Materials

P.No.	Name of Part	Material of Construction	Specification	Qty.
1	Body	Ductile Iron	IS 1865 Gr. 400 / 15	1
2	Body Lining	Nitrile Rubber	IS 5192 – 1	1
3	Flap / Disc	Stainless Steel	ASTM A 351 Gr. CF8	2
4	Hinge Pin	Stainless Steel	ASTM A 276 Type 304	1
5	Stop Pin	Stainless Steel	ASTM A 276 Type 304	1
6	Spring	Stainless Steel	Type 304	–
7	Packing Washer	PTFE	– – –	–
8	Packing Washer	Nitrile Rubber	IS : 5192-1	–
9	Retainer Plug	Carbon Steel	– – –	4

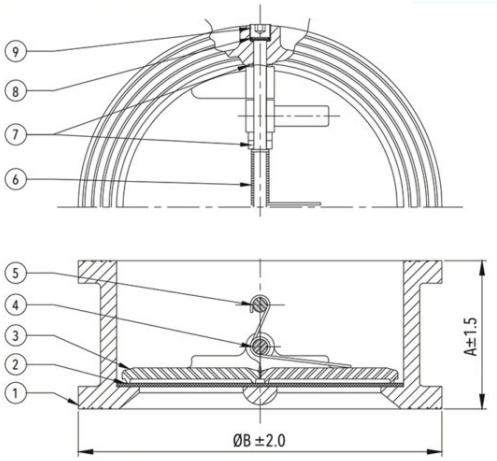

Sizes / Dimensions

Size (Inches)	Size (mm)	A±1.5	ØB±2
1 1/2	40	50	92
2	50	54	101
2 1/2	65	60	120
3	80	67	132
4	100	67	170
5	125	83	192
6	150	95	218
8	200	127	275
10	250	140	335
12	300	181	405
14	350	184	447
16	400	191	510

ZOLOTO INDUSTRIES
Zoloto House, 11th Milestone, Lambra, Nakodar Road,
Jalandhar – 144026. Punjab. INDIA
https://www.zolotovalves.com
Phones : +91 181 4676666 (100 Lines)
Facsimile: +91 181 2792500 & 2251600
Email : sales@zolotovalves.com, mktg@zolotovalves.com

Size (Inches)	Size (mm)	A±1.5	ØB±2
18	450	203	544
20	500	213	601
24	600	222	713

ZOLOTO INDUSTRIES
Zoloto House, 11th Milestone, Lambra, Nakodar Road,
Jalandhar – 144026. Punjab. INDIA
https://www.zolotovalves.com
Phones : +91 181 4676666 (100 Lines)
Facsimile: +91 181 2792500 & 2251600
Email : sales@zolotovalves.com, mktg@zolotovalves.com

ZOLOTO®
VALVES
since 1966

AN ISO 9001, 14001 & 45001
CERTIFIED COMPANY

I.B.R

1083 Cast Iron Non Return Valve PN 1.0 (Flanged)

IS 5312
CM/L-9700117720

Salient Features

- Design Standard IS 5312 – 1.
- Flanged Ends to IS 1538.
- Seating design – Swing Type.
- Bolted Cover.
- Renewable Seat with Premium Quality Rubber Flap.
- Flexible installation (Horizontal / Vertical)

PN 1.0 –
Test Pressure (Hydrostatic) :
Shell : 1.5 MPa
Seat : 1.0 MPa
Maximum Working Temperature : 80°C

Suitable For
Water

Materials

P.No.	Name of Part	Material of Material	Specification	Qty.
1	Bolts	Carbon Steel	IS 1363 Part 1 Class 4.6	As Reqd.
2	Cover	Cast Iron	IS 210 Gr. FG 200	1
3	Gasket	Nitrile Rubber	IS 638 Type B	1
4	Body	Cast Iron	IS 210 Gr. FG 200	1
5	Hinge Pin	Stainless Steel	IS 6603 Gr. X04 Cr19Ni9	1
6	Body Seat Ring	Bronze	IS 318 Gr. LTB 2	1
7	Bolts	Carbon Steel	IS 1363 Part 1 Class 4.6	1
8	Washer	Carbon Steel	– – –	1
9	Disc Facing	Nitrile Rubber	IS 638 Type B	1
10	Disc	Cast Iron	IS 210 Gr. FG 200	1
11	Hinge	Cast Iron	IS 210 Gr. FG 200	1
12	Bolt (Optional)	Carbon Steel	IS 1363 Part 1 Class 4.6	1
13	Washer	Carbon Steel	– – –	1
14	Plug	Stainless Steel	IS 6603 Gr. 12 Cr12	2
15	Nut	Carbon Steel	IS 1363 Part 3 Class 4.0	As Reqd.
16	Split Pin (Optional)	Carbon Steel	– – –	1
17	Hinge Bush	Bronze	IS 318 Gr. LTB 2	1

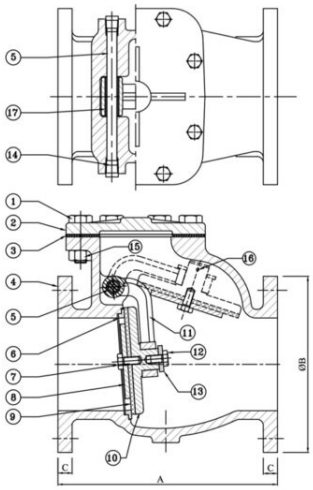

Sizes / Dimensions

Size (Inches)	Size (mm)	A	ØB	C
2*	50	203 ±2	165 (+1.5/-1.0)	16 +2
2 1/2*	65	216 ±2	185 (+1.5/-1.0)	16 +2
3	80	241 ±2	200 ±4.5	21 ±3
4	100	292 ±2	220 ±4.5	22 ±3
5	125	330 ±2	250 ±4.5	22.5 ±3
6	150	356 ±2	285 (+5.5/-2.5)	23 ±3
8	200	495 ±3	340 (+5.5/-2.5)	24.5 ±3
10	250	622 ±3	395 (+5.5/-2.5)	26 ±3
12	300	698 ±3	445 (+5.5/-2.5)	27.5 ±3

* Flanges as per IS 5312.

ZOLOTO INDUSTRIES
Zoloto House, 11th Milestone, Lambra, Nakodar Road,
Jalandhar – 144026. Punjab. INDIA
https://www.zolotovalves.com
Phones : +91 181 4676666 (100 Lines)
Facsimile: +91 181 2792500 & 2251600
Email : sales@zolotovalves.com, mktg@zolotovalves.com

ZOLOTO®
VALVES
since 1966

AN ISO 9001, 14001 & 45001
CERTIFIED COMPANY

1083A Cast Iron Non Return Valve PN 1.6 (Flanged)

IS 5312
CM/L-9700117720

Salient Features

- Design Standard IS 5312 – 1 .
- Flanged Ends to IS 1538.
- Seating design – Swing Type.
- Bolted Cover.
- Renewable Seat with Premium Quality Rubber Flap.
- Flexible installation (Horizontal / Vertical)

PN 1.6 –
Test Pressure (Hydrostatic) :
Shell : 2.4 MPa
Seat : 1.6 MPa
Maximum Working Temperature : 80°C

Suitable For
Water

Materials

P.No.	Name of Part	Material of Material	Specification	Qty.
1	Bolts	Carbon Steel	IS 1363 Part 1 Class 4.6	As Reqd.
2	Cover	Cast Iron	IS 210 Gr. FG 200	1
3	Gasket	Nitrile Rubber	IS 638 Type B	1
4	Body	Cast Iron	IS 210 Gr. FG 200	1
5	Hinge Pin	Stainless Steel	IS 6603 Gr. X04 Cr19Ni9	1
6	Body Seat Ring	Bronze	IS 318 Gr. LTB 2	1
7	Bolts	Carbon Steel	IS 1363 Part 1 Class 4.6	1
8	Washer	Carbon Steel	– – –	1
9	Disc Facing	Nitrile Rubber	IS 638 Type B	1
10	Disc	Cast Iron	IS 210 Gr. FG 200	1
11	Hinge	Cast Iron	IS 210 Gr. FG 200	1
12	Bolt (Optional)	Carbon Steel	IS 1363 Part 1 Class 4.6	1
13	Washer	Carbon Steel	– – –	1
14	Plug	Stainless Steel	IS 6603 Gr. 12 Cr12	2
15	Nut	Carbon Steel	IS 1363 Part 3 Class 4.0	As Reqd.
16	Split Pin (Optional)	Carbon Steel	– – –	1
17	Hinge Bush	Bronze	IS 318 Gr. LTB 2	1

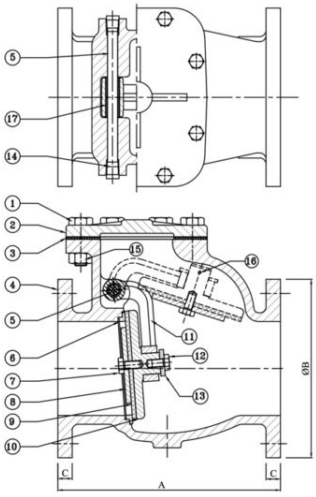

Sizes / Dimensions

Size (Inches)	Size (mm)	A	ØB	C
2*	50	203 ±2	165 (+1.5/-1.0)	16 +2
2 1/2*	65	216 ±2	185 (+1.5/-1.0)	16 +2
3	80	241 ±2	200 ±4.5	21 ±3
4	100	292 ±2	220 ±4.5	22 ±3
5	125	330 ±2	250 ±4.5	22.5 ±3
6	150	356 ±2	285 (+5.5/-2.5)	23 ±3
8	200	495 ±3	340 (+5.5/-2.5)	24.5 ±3
10	250	622 ±3	395 (+5.5/-2.5)	26 ±3
12	300	698 ±3	445 (+5.5/-2.5)	27.5 ±3

* Flanges as per IS 5312.

ZOLOTO INDUSTRIES
Zoloto House, 11th Milestone, Lambra, Nakodar Road,
Jalandhar – 144026. Punjab. INDIA
https://www.zolotovalves.com
Phones : +91 181 4676666 (100 Lines)
Facsimile: +91 181 2792500 & 2251600
Email : sales@zolotovalves.com, mktg@zolotovalves.com

ZOLOTO®
VALVES
since 1966

AN ISO 9001, 14001 & 45001
CERTIFIED COMPANY

1083B Cast Iron Non Return Valve PN 1.0 (With Bye Pass Arrangement) (Flanged)

IS 5312
CM/L-9700117720

Salient Features

- Design Standard IS 5312 – 1.
- Flanged Ends to IS 1538.
- Seating design – Swing Type.
- Bolted Cover.
- Renewable Seat with Premium Quality Rubber Flap.
- Flexible installation (Horizontal / Vertical)

PN 1.0 –
Test Pressure (Hydrostatic) :
Shell : 1.5 MPa
Seat : 1.0 MPa
Maximum Working Temperature : 80°C

Suitable For
Water

Materials

P.No.	Name of Part	Material of Material	Specification	Qty.
1	Bolts	Carbon Steel	IS 1363 Part 1 Class 4.6	As Reqd.
2	Cover	Cast Iron	IS 210 Gr. FG 200	1
3	Gasket	Nitrile Rubber	IS 638 Type B	1
4	Body	Cast Iron	IS 210 Gr. FG 200	1
5	Hinge Pin	Stainless Steel	IS 6603 Gr. X04 Cr19Ni9	1
6	Body Seat Ring	Bronze	IS 318 Gr. LTB 2	1
7	Bolts	Carbon Steel	IS 1363 Part 1 Class 4.6	1
8	Washer	Carbon Steel	– – –	1
9	Disc Facing	Nitrile Rubber	IS 638 Type B	1
10	Disc	Cast Iron	IS 210 Gr. FG 200	1
11	Hinge	Cast Iron	IS 210 Gr. FG 200	1
12	Bolt (Optional)	Carbon Steel	IS 1363 Part 1 Class 4.6	1
13	Washer	Carbon Steel	– – –	1
14	Plug	Stainless Steel	IS 6603 Gr. 12 Cr12	2
15	Nut	Carbon Steel	IS 1363 Part 3 Class 4.0	As Reqd.
16	Split Pin (Optional)	Carbon Steel	– – –	1
17	Hinge Bush	Bronze	IS 318 Gr. LTB 2	1
18	Pipe Socket	S.G.Iron	IS 1865 Gr. SG400/15	1
19	Pipe Elbow	S.G.Iron	IS 1865 Gr. SG400/15	2
20	By Pass Valve	Bronze Gate valve	ISI Marked Class-1	1
21	Pipe Union	S.G.Iron	IS 1865 Gr. SG400/15	1
22	By Pass Pipe	Galvanized Iron	—	As Reqd.

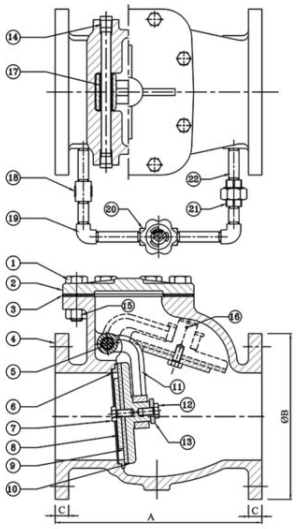

Sizes / Dimensions

Size (Inches)	Size (mm)	A	ØB	C	By Pass Size
2*	50	203 ±2	165 (+1.5/-1.0)	16 +2	1/2″
2 1/2*	65	216 ±2	185 (+1.5/-1.0)	16 +2	1/2″
3	80	241 ±2	200 ±4.5	21 ±3	1/2″
4	100	292 ±2	220 ±4.5	22 ±3	1/2″
5	125	330 ±2	250 ±4.5	22.5 ±3	1/2″
6	150	356 ±2	285 (+5.5/-2.5)	23 ±3	1/2″
8	200	495 ±3	340 (+5.5/-2.5)	24.5 ±3	1″
10	250	622 ±3	395 (+5.5/-2.5)	26 ±3	1″

ZOLOTO INDUSTRIES
Zoloto House, 11th Milestone, Lambra, Nakodar Road,
Jalandhar – 144026. Punjab. INDIA
https://www.zolotovalves.com
Phones : +91 181 4676666 (100 Lines)
Facsimile: +91 181 2792500 & 2251600
Email : sales@zolotovalves.com, mktg@zolotovalves.com

Size (Inches)	Size (mm)	A	ØB	C	By Pass Size
12	300	698 ±3	445 (+5.5/-2.5)	27.5 ±3	1.1/2″

* Flanges as per IS 5312 Part 1

ZOLOTO INDUSTRIES
Zoloto House, 11th Milestone, Lambra, Nakodar Road,
Jalandhar – 144026. Punjab. INDIA
https://www.zolotovalves.com
Phones : +91 181 4676666 (100 Lines)
Facsimile: +91 181 2792500 & 2251600
Email : sales@zolotovalves.com, mktg@zolotovalves.com

ZOLOTO®
VALVES
since 1966

AN ISO 9001, 14001 & 45001 CERTIFIED COMPANY

1083C Cast Iron Non-Return Valve PN 1.6 (With Bye Pass Arrangement) (Flanged)

IS 5312

Salient Features

- Design Standard IS 5312 – 1 .
- Flanged Ends to IS 1538.
- Seating design – Swing Type.
- Bolted Cover.
- Renewable Seat with Premium Quality Rubber Flap.
- Flexible installation (Horizontal / Vertical)

PN 1.6 –
Test Pressure (Hydrostatic) :
Shell : 2.4 MPa
Seat : 1.6 MPa
Maximum Working Temperature : 80°C

Suitable For
Water

Materials

P.No.	Name of Part	Material of Material	Specification	Qty.
1	Bolts	Carbon Steel	IS 1363 Part 1 Class 4.6	As Reqd.
2	Cover	Cast Iron	IS 210 Gr. FG 200	1
3	Gasket	Nitrile Rubber	IS 638 Type B	1
4	Body	Cast Iron	IS 210 Gr. FG 200	1
5	Hinge Pin	Stainless Steel	IS 6603 Gr. X04 Cr19Ni9	1
6	Body Seat Ring	Bronze	IS 318 Gr. LTB 2	1
7	Bolts	Carbon Steel	IS 1363 Part 1 Class 4.6	1
8	Washer	Carbon Steel	– – –	1
9	Disc Facing	Nitrile Rubber	IS 638 Type B	1
10	Disc	Cast Iron	IS 210 Gr. FG 200	1
11	Hinge	Cast Iron	IS 210 Gr. FG 200	1
12	Bolt (Optional)	Carbon Steel	IS 1363 Part 1 Class 4.6	1
13	Washer	Carbon Steel	– – –	1
14	Plug	Stainless Steel	IS 6603 Gr. 12 Cr12	2
15	Nut	Carbon Steel	IS 1363 Part 3 Class 4.0	As Reqd.
16	Split Pin (Optional)	Carbon Steel	– – –	1
17	Hinge Bush	Bronze	IS 318 Gr. LTB 2	1
18	Pipe Socket	S.G.Iron	IS 1865 Gr. SG400/15	1
19	Pipe Elbow	S.G.Iron	IS 1865 Gr. SG400/15	2
20	By Pass Valve	Bronze Gate valve	ISI Marked Class-2	1
21	Pipe Union	S.G.Iron	IS 1865 Gr. SG400/15	1
22	By Pass Pipe	Galvanized Iron	—	As Reqd.

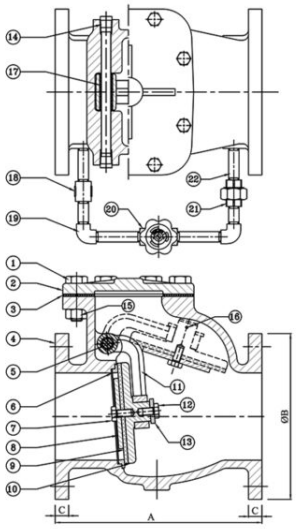

Sizes / Dimensions

Size (Inches)	Size (mm)	A	ØB	C	By Pass Size
2*	50	203 ±2	165 (+1.5/-1.0)	16 +2	1/2″
2 1/2*	65	216 ±2	185 (+1.5/-1.0)	16 +2	1/2″
3	80	241 ±2	200 ±4.5	21 ±3	1/2″
4	100	292 ±2	220 ±4.5	22 ±3	1/2″
5	125	330 ±2	250 ±4.5	22.5 ±3	1/2″
6	150	356 ±2	285 (+5.5/-2.5)	23 ±3	1/2″
8	200	495 ±3	340 (+5.5/-2.5)	24.5 ±3	1″
10	250	622 ±3	395 (+5.5/-2.5)	26 ±3	1″

ZOLOTO INDUSTRIES
Zoloto House, 11th Milestone, Lambra, Nakodar Road,
Jalandhar – 144026. Punjab. INDIA
https://www.zolotovalves.com
Phones : +91 181 4676666 (100 Lines)
Facsimile: +91 181 2792500 & 2251600
Email : sales@zolotovalves.com, mktg@zolotovalves.com

* Flanges as per IS 5312 Part 1

ZOLOTO®
VALVES
since 1966

AN ISO 9001, 14001 & 45001
CERTIFIED COMPANY

1093 Bronze Landing (Fire Hydrant) Valve (Flanged)

Salient Features

- Design Standard IS 5290.
- Confirming to Type A specification.
- Screwed in Bonnet having instantaneous coupling with single outlet.
- PTFE Gland Packing for longer life and smooth operation of stem.
- Large flow way area to get full flow of water.
- Leakage proof by virtue of elastomer seat.
- Smooth operation of blank cap for quick mounting of water pipe.
- Life long rust free service.

Test Pressure (Hydrostatic) :
Shell : 21 kg/cm²g (300 psig)
Seat : 14 kg/cm²g (200 psig)
Maximum Working Temperature : 110°C

Suitable For
Water

Materials

P.No.	Name of Part	Material of Construction	Specification	Qty.
1	Body	Bronze	IS 318 Gr. LTB 2	1
2	Spilt Pin	Brass	– – –	1
3	Disc Nut	Bronze	IS 318 Gr. LTB 2	1
4	Washer	Bronze	IS 318 Gr. LTB 2	1
5	Disc Washer	Rubber	IS 937	1
6	Disc Holder	Bronze	IS 318 Gr. LTB 2	1
7	Check Nut	Bronze	IS 318 Gr. LTB 2	1
8	Stem	Brass	IS 319	1
9	Bonnet	Bronze	IS 318 Gr. LTB 2	1
10	Gland Packing	Asbestos Thread	– – –	–
11	Gland	Brass	IS 319	1
12	Gland Nut	Bronze	IS 318 Gr. LTB 2	1
13	Knob with Cap	Bronze	IS 318 Gr. LTB 2	1
14	Spring	Phosphorous Bronze	IS 7608	1
15	Cam Tooth Nut	Bronze	IS 318 Gr. LTB 2	1
16	Cam Housing	Bronze	IS 318 Gr. LTB 2	1
17	Cam Tooth	Brass	IS 319	1
18	Instantaneous Coupling	Bronze	IS 318 Gr. LTB 2	1
19	Washer	Rubber	IS 937	1
20	Blank Cap	Aluminium / ABS Plastic	IS 617 / – – –	1
21	Chain	Carbon Steel	– – –	1
22	Handwheel	Cast Iron	IS 210 Gr. FG 200	1
23	Washer	Carbon Steel	– – –	1
24	Bolt	Carbon Steel	– – –	1

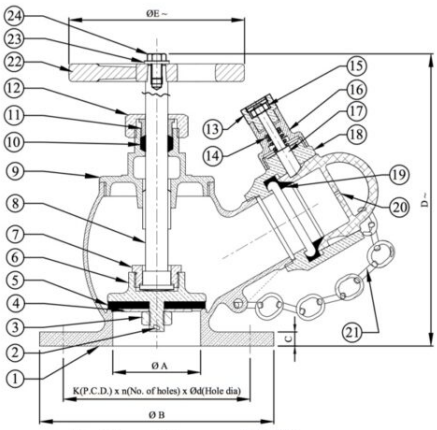

Size 80mm x 65mm as per IS:5290

Sizes / Dimensions

Size (Inches)	Size (mm)	ØA	ØB	C +3	D ~	ØE ~
3	80	75	200	12	240	150

~ ±10

ZOLOTO INDUSTRIES
Zoloto House, 11th Milestone, Lambra, Nakodar Road,
Jalandhar – 144026. Punjab. INDIA
https://www.zolotovalves.com
Phones : +91 181 4676666 (100 Lines)
Facsimile: +91 181 2792500 & 2251600
Email : sales@zolotovalves.com, mktg@zolotovalves.com

ZOLOTO®
VALVES
since 1966

AN ISO 9001, 14001 & 45001
CERTIFIED COMPANY

1093A Stainless Steel S.S 304 Landing (Fire Hydrant) Valve (Flanged)

Salient Features

- Design Reference Standard IS 5290.
- Confirming to Type A specification.
- Screwed in Bonnet having instantaneous coupling with single outlet.
- PTFE Gland Packing for longer life and smooth operation of stem.
- Large flow way area to get full flow of water.
- Leakage proof by virtue of elastomer seat.
- Smooth operation of blank cap for quick mounting of water pipe.
- Life long rust free service.

Test Pressure (Hydrostatic) :
Shell : 21 kg/cm²g (300 psig)
Seat : 14 kg/cm²g (200 psig)
Maximum Working Temperature : 110°C

Suitable For
Water

Materials

P.No.	Name of Part	Material of Construction	Specification	Qty.
1	Body	Stainless Steel	IS 3444 Gr. 1*	1
2	Chain	Carbon Steel	– – –	1
3	Disc Nylock Nut	Carbon Steel	– – –	1
4	Washer	Stainless Steel	IS 6603 Gr. X04Cr19Ni9	1
5	Disc Washer	Rubber	IS 937	1
6	Disc Holder	Stainless Steel	IS 3444 Gr. 1*	1
7	Check Nut	Stainless Steel	IS 3444 Gr. 1*	1
8	Stem	Stainless Steel	IS 6603 Gr. X04Cr19Ni9	1
9	Bonnet	Stainless Steel	IS 3444 Gr. 1*	1
10	Gland Packing	Asbestos Thread	– – –	–
11	Gland	Stainless Steel	IS 6603 Gr. X04Cr19Ni9	1
12	Gland Nut	Stainless Steel	IS 3444 Gr. 1*	1
13	Knob with Cap	Stainless Steel	IS 3444 Gr. 1*	1
14	Spring	Stainless Steel	IS 4454 Part 4 Gr. 2	1
15	Cam Tooth Nut	Stainless Steel	IS 6603 Gr. X04Cr19Ni9	1
16	Cam Housing	Stainless Steel	IS 3444 Gr. 1*	1
17	Cam Tooth	Stainless Steel	IS 3444 Gr. 1*	1
18	Instantaneous Coupling	Stainless Steel	IS 3444 Gr. 1*	1
19	Washer	Rubber	IS 937	1
20	Blank Cap	Aluminium / ABS Plastic	IS 617 / – – –	1
21	Handwheel	Cast Iron	IS 210 Gr. FG 200	1
22	Washer	Carbon Steel	– – –	1
23	Nut	Carbon Steel	– – –	1

* or equivalent grade

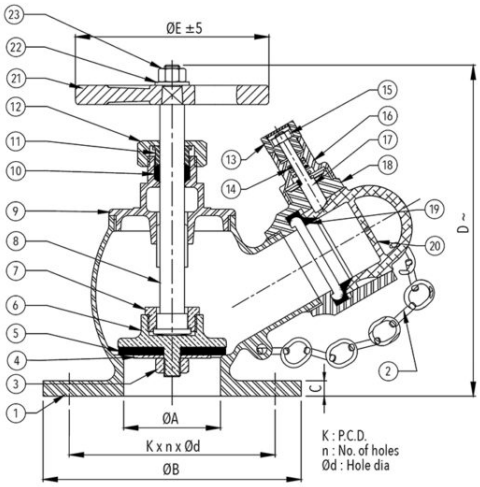

Size 80mm x 65mm as per IS:5290

Sizes / Dimensions

Size (Inches)	Size (mm)	ØA	ØB	C	D~	ØE±5	K	n	Ød
3	80	75	200	12	230	150	160	4	19

~ ±10

ZOLOTO INDUSTRIES
Zoloto House, 11th Milestone, Lambra, Nakodar Road,
Jalandhar – 144026. Punjab. INDIA
https://www.zolotovalves.com
Phones : +91 181 4676666 (100 Lines)
Facsimile: +91 181 2792500 & 2251600
Email : sales@zolotovalves.com, mktg@zolotovalves.com

ZOLOTO®
VALVES
since 1966

AN ISO 9001, 14001 & 45001
CERTIFIED COMPANY

1096 Ductile Iron Sluice Valve PN 1.6 (Flanged)

IS 14846
CM/L-9761093

Salient Features

- Design Standard IS 14846 PN 1.6.
- Bolted Bonnet, Inside Screw, Non-Rising Stem.
- Rigid and Sturdy design.
- Handwheel Operated.
- Flange Ends as per IS 1538.

Test Pressure (Hydrostatic) :
Shell : 2.4 MPa
Seat : 1.6 MPa
Maximum Working Temperature : 45°C

Suitable For
Water

Materials

P.No.	Name of Part	Material of Construction	Specification	Qty.
1	Body	Ductile Iron	IS 1865 Gr. SG 500/7	1
2	Body Seat Ring	Bronze	IS 318 Gr. LTB 2	2
3	Wedge Ring	Bronze	IS 318 Gr. LTB 2	2
4	Wedge	Ductile Iron	IS 1865 Gr. SG 500/7	1
5	Stem Bush	Bronze	IS 318 Gr. LTB 2	1
6	Gasket	Rubber	IS 638 Type B	1
7	Bonnet	Ductile Iron	IS 1865 Gr. SG 500/7	1
8	Stem	Stainless Steel	IS 6603 Gr. 12 Cr. 12	1
9	Bolt	Carbon Steel	IS 1363 Part 1 Class 4.6	To Suit
10	Nuts	Carbon Steel	IS 1363 Part 3 Class 4.0	To Suit
11	Packing	Hemp & Jute	IS 5414	–
12	Gland Flange	Ductile Iron	IS 1865 Gr. SG 500/7	1
13	Handwheel	Ductile Iron	IS 1865 Gr. SG 500/7	1
14	Washer	Carbon Steel	– – –	1
15	Bolt	Carbon Steel	IS 1363 Part 1 Class 4.6	1
16	Nuts	Carbon Steel	IS 1363 Part 3 Class 4.0	2
17	Bolts	Carbon Steel	IS 1363 Part 1 Class 4.6	2
18	Thrust Plate	Ductile Iron	IS 1865 Gr. SG 500/7	1
19	Stuffing Box	Ductile Iron	IS 1865 Gr. SG 500/7	1
20	Bolts	Carbon Steel	IS 1363 Part 1 Class 4.6	To Suit
21	Nuts	Carbon Steel	IS 1363 Part 3 Class 4.0	To Suit
22	Gasket	Rubber	IS 638 Type B	1

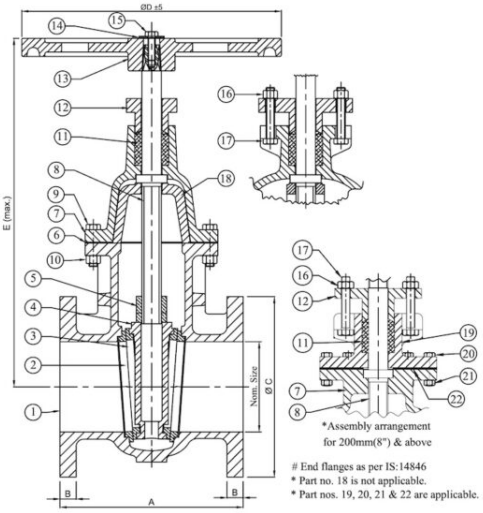

Sizes / Dimensions

Size (Inches)	Size (mm)	A	B	ØC	ØD ±5	E (Max.)
2#	50#	178 ±2	16 +2	165 (+1.5/-1.0)	280	365
2 1/2#	65#	190 ±2	16 +2	185 (+1.5/-1.0)	280	380
3	80	203 ±2	21 ±3	200 ±4.5	280	425
4	100	229 ±2	22 ±3	220 ±4.5	360	470
5	125	254 ±2	22.5 ±3	250 ±4.5	360	485
6	150	267 ±2	23 ±3	285 (+5.5/-2.5)	360	595
8*	200*	292 ±3	24.5 ±3	340 (+5.5/-2.5)	450	725
10*	250*	330 ±3	26 ±3	395 (+5.5/-2.5)	640	835

ZOLOTO INDUSTRIES
Zoloto House, 11th Milestone, Lambra, Nakodar Road,
Jalandhar – 144026. Punjab. INDIA
https://www.zolotovalves.com
Phones : +91 181 4676666 (100 Lines)
Facsimile: +91 181 2792500 & 2251600
Email : sales@zolotovalves.com, mktg@zolotovalves.com

Size (Inches)	Size (mm)	A	B	ØC	ØD ±5	E (Max.)
12*	300*	356 ±3	27.5 ±3	445 (+5.5/-2.5)	640	910

Flanges as per IS 14846.
* For size 200, 250 and 300 part number 18 is not applicable.

NOTE : Valves are also available with extended stem, Pad lock arrangement, Limit switch and Brass spindle at a nominal extra cost. By Pass arrangement (for sizes 200mm & above) can also be provided at a nominal extra cost.